Product Details for 1 -1478045 -0

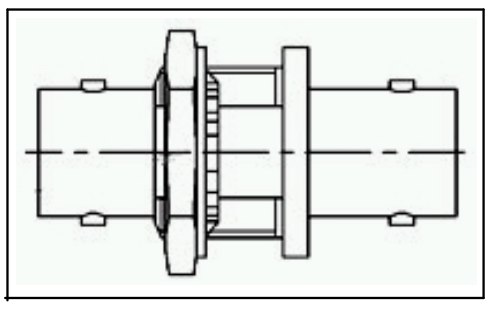

1-1478045 -0

Active

BNC RF Connectors

RoHS Compliant (Statement of Compliance)

Product Highlights:

- Adapter
- Connector Type = BNC
- Not Stacked
- Body Style = Bulkhead
- Not Surface Mountable

View all Features

Quick Links

Check Pricing & Availability
Search for Tooling
Product Feature Selector
Contact Us About This Product

Documentation & Additional Information

Product Drawings:

- BNC BULKHEAD ADAPTOR J -J 75 OHM (PDF, English)

Catalog Pages/Data Sheets:

- None Available

Product Specifications:

- None Available

Application Specifications:

- None Available

Instruction Sheets:

- None Available

CAD Files:

- None Available

List all Documents

Additional Information:

- Product Line Information

Related Products:

- Tooling

Product Features

(Please use the Product Drawing for all design activity)

Product Type Features:

- Product Type = Adapter
- Connector Type = BNC
- Stacked = No
- Body Style = Bulkhead
- Grade = Professional
- Body Shape = Round
- Body Material = Brass
- Adapter Type = Jack -Jack
- Sealed = No
- Isolated = No
- Dielectric Material = PTFE
- Panel Thickness (mm [in]) = 2.00 – 5.00 [0.078 – 0.197]
- Flats Dimension = 16.0 A/F

Mechanical Attachment:

- Surface Mountable = No
- Panel Attachment = With
- Panel Attachment Method = Bulkhead, Hex Nut
- Panel Attachment Style = Rear Mount, Front Mount
- Panel Cutout = 12.0mm x 12.7mm D -Shape
- Flange Dimension [Dia.] (mm [in]) = 15.5 [0.61]
- Flange and Thread Material = ABS
- Lockwasher Material = Mild Steel
- Lockwasher Plating = Silver

Electrical Characteristics:

- Connector Impedance (?) = 75
- Frequency = DC to 2 GHz

Body Related Features:

- Body Plating = Silver
- Polarized = No

Contact Related Features:

- Center Contact Material = Brass
- Center Contact Plating = Silver

Industry Standards:

- Government/Industry Qualification = No
- RoHS/ELV Compliance = RoHS compliant, ELV compliant
- Lead Free Solder Processes = Not relevant for lead free process
- RoHS/ELV Compliance History = Converted to comply with RoHS directive

Conditions for Usage:

- Operating Temperature (Max.) (°C) = 85

Packaging Related Features:

- Packaging Method = Individual
- Packaging Quantity = 50

Other:

- Brand = Greenpar

© 2006 Tyco Electronics Corporation All Rights Reserved