| REV. | DATE | DESCRIPTION |
|---|---|---|
| NC | 04/11/02 | INITIAL RELEASE |

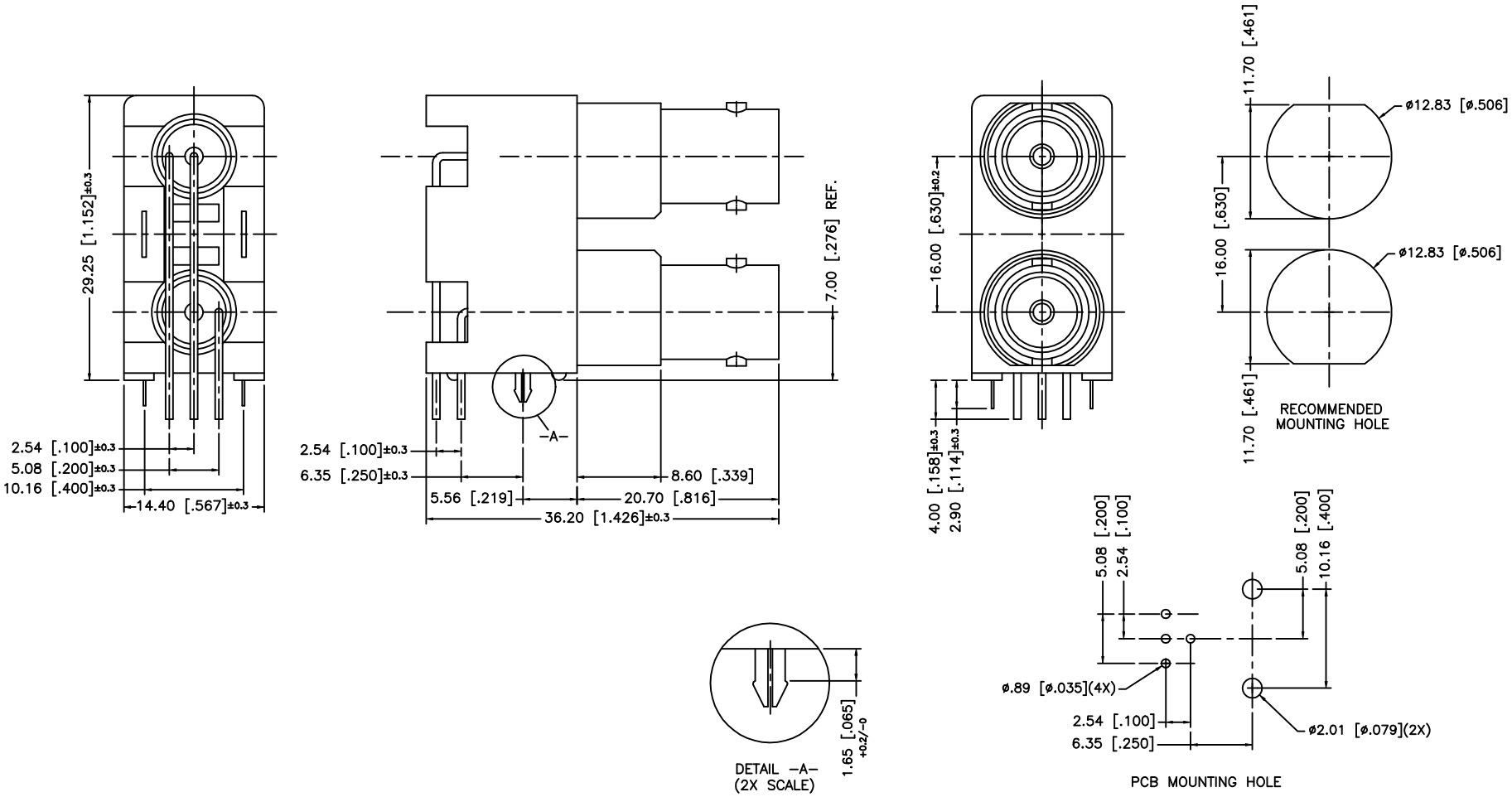


| | | | |
|---|---|---|---|
| 8 | MNTING POST | BRASS | BRT. TIN |
| 7 | POST | COPPER | BRT. TIN |
| 6 | POST | COPPER | BRT. TIN |
| 5 | HOUSING | PBT | WHITE |
| 4 | CONTACT PIN | BER. COPPER | BRT. TIN |
| 3 | CONTACT PIN | BER. COPPER | BRT. TIN |
| 2 | INSULATOR | POLY PRO | NATURAL |
| 1 | BODY | ZINC DIE CAST | NICKEL |
| | DESCRIPTION | MATERIAL | FINISH |

UNLESS OTHERWISE SPECIFIED DIMENSIONS ARE IN MILLIMETERS

DIMENSIONS IN [ ] ARE IN INCHES FOR CUSTOMER REFERANCE ONLY

UNLESS OTHERWISE SPECIFIED TOLERANCES FOR INCHES ARE:

.XXX = ± 0.005"
.XX = ± 0.010"
.X = ± 0.020"

DO NOT SCALE DRAWING

| APPROVALS | | DATE |
|---|---|---|
| DRAWN | G.R.S. | 04/11/02 |
| CHECKED | | |
| ISSUED | | |

**Amphenol - Connex**
**CONNECTOR CORPORATION**

TITLE: DUAL PORT BNC R/A PCB MOUNT RECEPTACLE – WHITE 50ohm

| SIZE | FSCM NO. | DWG. NO. | REV. |
|---|---|---|---|
| A | 99001 | 112704.DWG | NC |
| SCALE NA | PART NO. 112704 | | SHEET 1 OF 1 |