REV.	DATE	DESCRIPTION
A	10/29/02	MODIFY DECRIPTION

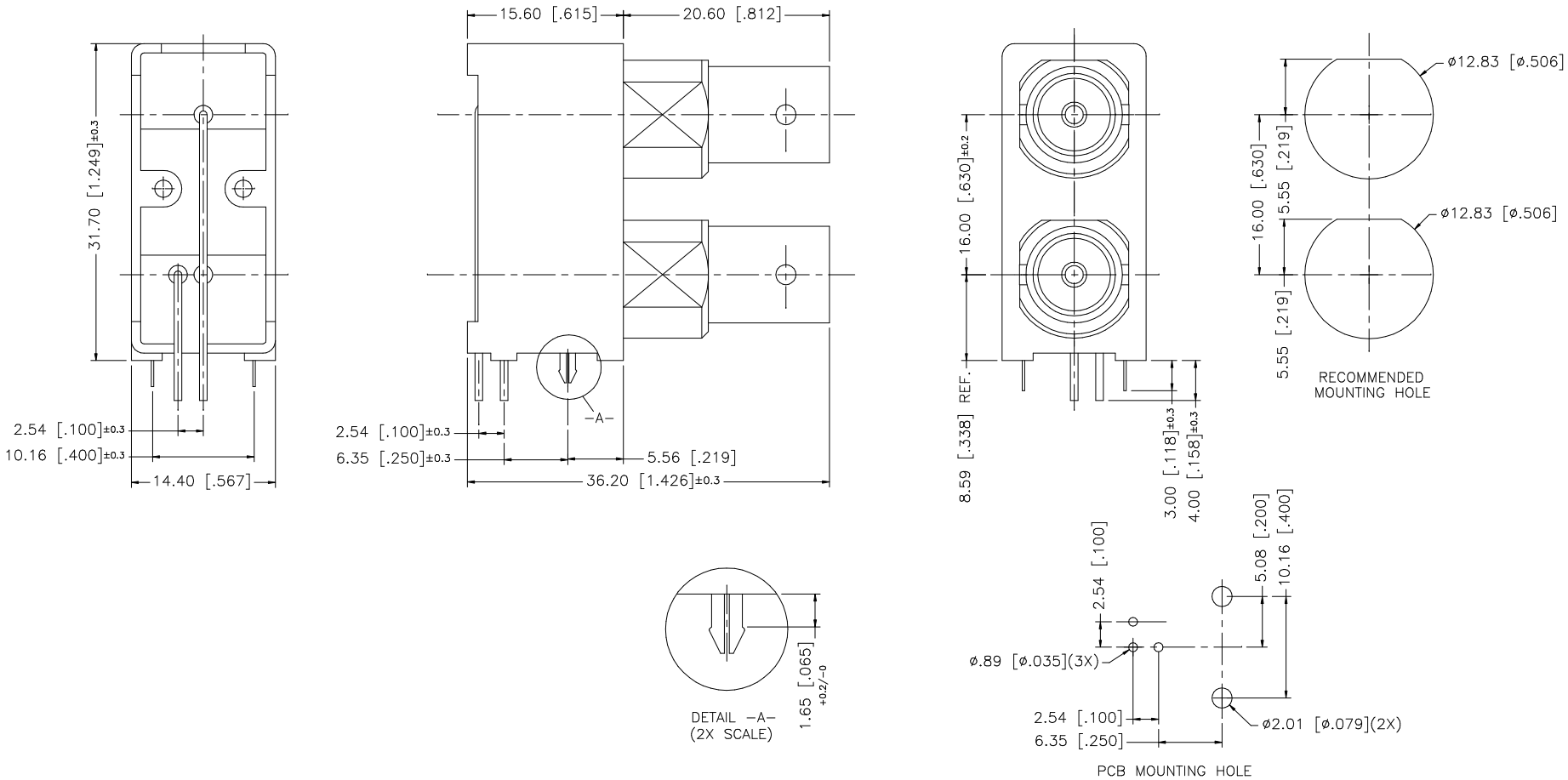

	DESCRIPTION	MATERIAL	FINISH
8			
7			
6	MNTING POST	BRASS	BRT. TIN
5	POST	COPPER	BRT. TIN
4	CONTACT PIN	BER. COPPER	GOLD FLSH.
3	CONTACT PIN	BER. COPPER	GOLD FLSH.
2	INSULATOR	POLY PRO	NATURAL
1	BODY	ZINC DIE CAST	NICKEL

UNLESS OTHERWISE SPECIFIED DIMENSIONS ARE IN MILLIMETERS

DIMENSIONS IN [ ] ARE IN INCHES FOR CUSTOMER REFERANCE ONLY

UNLESS OTHERWISE SPECIFIED TOLERANCES FOR INCHES ARE:

.XXX = ± 0.005"
.XX = ± 0.010"
.X = ± 0.020"

DO NOT SCALE DRAWING

APPROVALS		DATE
DRAWN	G.R.S.	10/29/02
CHECKED		
ISSUED		

Amphenol - Connex
CONNECTOR CORPORATION

TITLE: DUAL PORT BNC PCB MOUNT RECEPTACLE – DIE CAST 75ohm

SIZE	FSCM NO.	DWG. NO.	REV.
A	99001	112707.DWG	A

SCALE	PART NO.	SHEET
NA	112707	1 OF 1