1-1478139 -0 Product Details

Live Product Chat

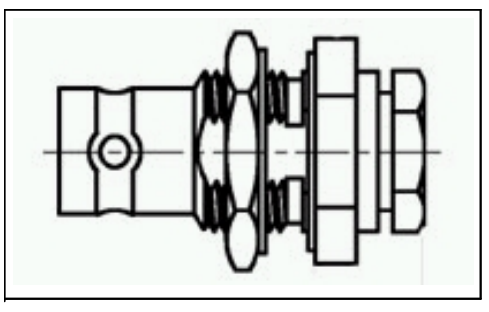

1-1478139 -0

TE Part Number: 1 -1478139 -0

Active

Add to Part List

BNC RF Connectors

Converted to EU RoHS/ELV Compliant (Statement of Compliance)

Product Highlights:

- Connector
- Connector Type = BNC
- Jack
- Terminate To Coaxial Cable
- Coaxial Cable Termination Type = MIL-Clamp

View all Features | Find Similar Products

Quick Links

- Check Pricing & Availability
- Search for Tooling
- Product Feature Selector
- Contact Us About This Product

Documentation & Additional Information

Product Drawings:

- BNC STRAIGHT BULKHEAD JACK MIL -CLAMP 75 OHM RG179B/U... (PDF, English)

Catalog Pages/Data Sheets:

- None Available

Product Specifications:

- None Available

Application Specifications:

- None Available

Instruction Sheets:

- None Available

CAD Files:

- None Available

List all Documents

Additional Information:

- Product Line Information

Related Products:

- Tooling

Product Features

(Please use the Product Drawing for all design activity)

Product Type Features:

- Product Type = Connector
- Connector Type = BNC
- Gender = Jack
- Body Style = Bulkhead
- Grade = Professional
- Body Material = Brass
- Sealed = No
- Isolated = No
- Dielectric Material = PTFE
- Number of Ports = 1
- Panel Thickness (mm [in]) = 2.00 – 5.00 [0.078 – 0.197]
- Flats Dimension = 16.0 A/F
- Gasket Material = White Silicone Rubber

Mechanical Attachment:

- Surface Mountable = No
- Panel Attachment = With
- Panel Attachment Method = Hex Nut
- Panel Attachment Style = Rear Mount
- Panel Cutout = 12.0mm x 12.9mm D-Shape
- Flange Dimension [A/F] (mm [in]) = 17.5 [0.689]
- Flange and Thread Material = Brass
- Lockwasher Material = Mild Steel
- Lockwasher Plating = Silver

Electrical Characteristics:

- Connector Impedance (?) = 75
- Frequency = DC - 2 GHz

Termination Related Features:

- Coaxial Cable Termination Type = MIL-Clamp

Body Related Features:

- Hardware Included = No
- Body Plating = Silver
- Polarized = No

Contact Related Features:

- Center Contact Material = Brass
- Center Contact Plating = Silver

Configuration Related Features:

- Coaxial Cable Type (RG/U or Mfg.) = 179B, 187A, Raychem 7530A1314, Raychem 7530H1444, Raychem CLFH -179, Raychem EPD 46504R, URM 111

Industry Standards:

- Government/Industry Qualification = No
- RoHS/ELV Compliance = RoHS compliant, ELV compliant
- Lead Free Solder Processes = Wave solder capable to 240°C, Wave solder capable to 260°C, Wave solder capable to 265°C
- RoHS/ELV Compliance History = Converted to comply with RoHS directive

Conditions for Usage:

- Terminate To = Coaxial Cable
- Operating Temperature (Max.) (°C) = 165

Packaging Related Features:

- Packaging Method = Individual
- Packaging Quantity = 50

Other:

- Brand = Greenpar

© 2008 Tyco Electronics Corporation All Rights Reserved