REV.	DATE	DESCRIPTION
NC	12/15/03	INITIAL RELEASE

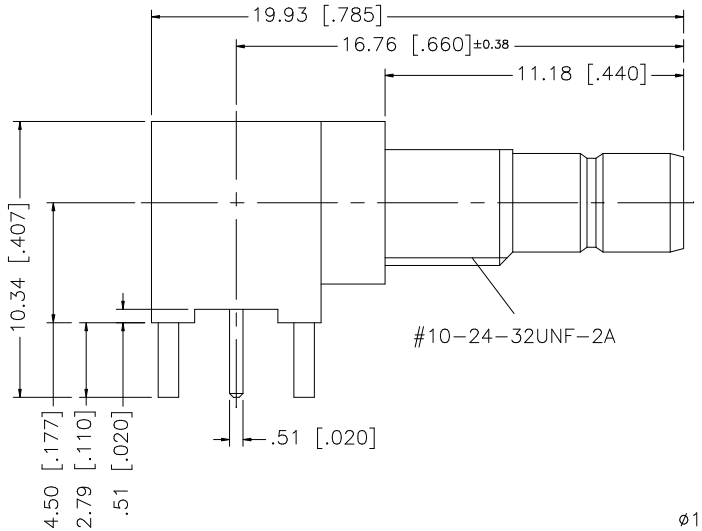

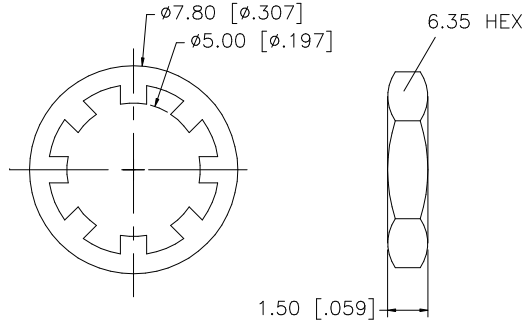

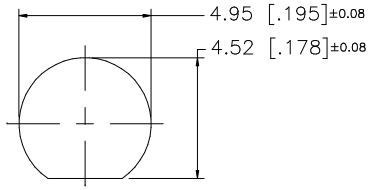

RECOMMENDED MOUNTING HOLE

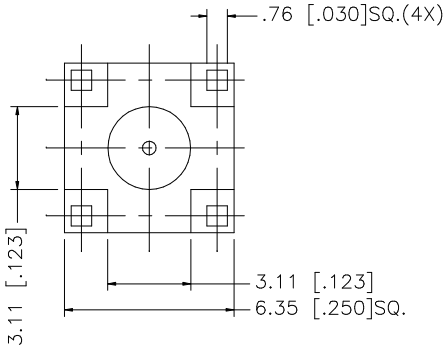

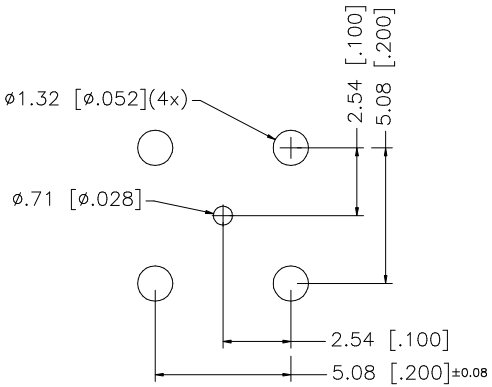

PCB MOUNTING HOLES

NOTE:

1. MAX. PANEL THICKNESS = 2.36mm

	DESCRIPTION	MATERIAL	FINISH	QTY
8				
7				
6				
5	LOCK WASHER	BRASS	GOLD	1
4	HEX NUT	BRASS	GOLD	1
3	CONTACT PIN	BRASS	GOLD	1
2	INSULATOR	TEFLON	NATURAL	1
1	BODY	BRASS	GOLD	1

UNLESS OTHERWISE SPECIFIED DIMENSIONS ARE IN MILLIMETERS. DIMENSIONS IN [ ] ARE IN INCHES AND FOR CUSTOMER REFERANCE ONLY.

UNLESS OTHERWISE SPECIFIED TOLERANCES FOR MILLIMETERS ARE:
0.5 – 8mm ± 0.20mm
8 – 30mm ± 0.40mm
30 – 120mm ± 0.50mm

UNLESS OTHERWISE SPECIFIED TOLERANCES FOR INCHES ARE:
.020 – .315 = ± 0.007"
.315 – 1.180 = ± 0.015"
1.180 – 4.724 = ± 0.020"

DO NOT SCALE DRAWING

APPROVALS		DATE
DRAWN	G.R.S.	12/15/03
CHECKED		
ISSUED		
SHEET	1 OF 1	
CAD FILE	C:/142/142335-75.DWG	

Amphenol Connex

PART DESCRIPTION: SMB R/A P.C. MOUNT JACK

PART NO. 142335-75

DWG. NO. 142335-75.DWG | REV. A | SIZE A | SCALE NA