NAME:1000006199 OBJECT:CAPACITOR_ASSEMBLY DATE:23-Jun-09 18:15:00

| SIZE | DRAWING NO. | REV | SHEET |
|---|---|---|---|
| C | 97F9608 | 2 | 1 |

RBC PROPRIETARY AND CONFIDENTIAL INFORMATION

This document is the property of REGAL BELOIT CORPORATION ("RBC") including its subsidiaries and divisions and contains proprietary information of RBC. This document is loaned on the express condition that neither it nor the information contained therein shall be disclosed to others without the express written consent of RBC, and that the information shall be used by the recipient only as approved expressly by RBC. This document shall be returned to RBC upon its request. This document may be subject to certain restrictions under U.S. export control laws and regulations.

REVISIONS

| REV. | DESCRIPTION | DATE | APPROVED |
|---|---|---|---|
| 1 | Modified as per ECN #0627 | 11/11/05 | HV |
| 2 | Modified as per ECN # 0668 & 0673 | 07/18/08 | HV |

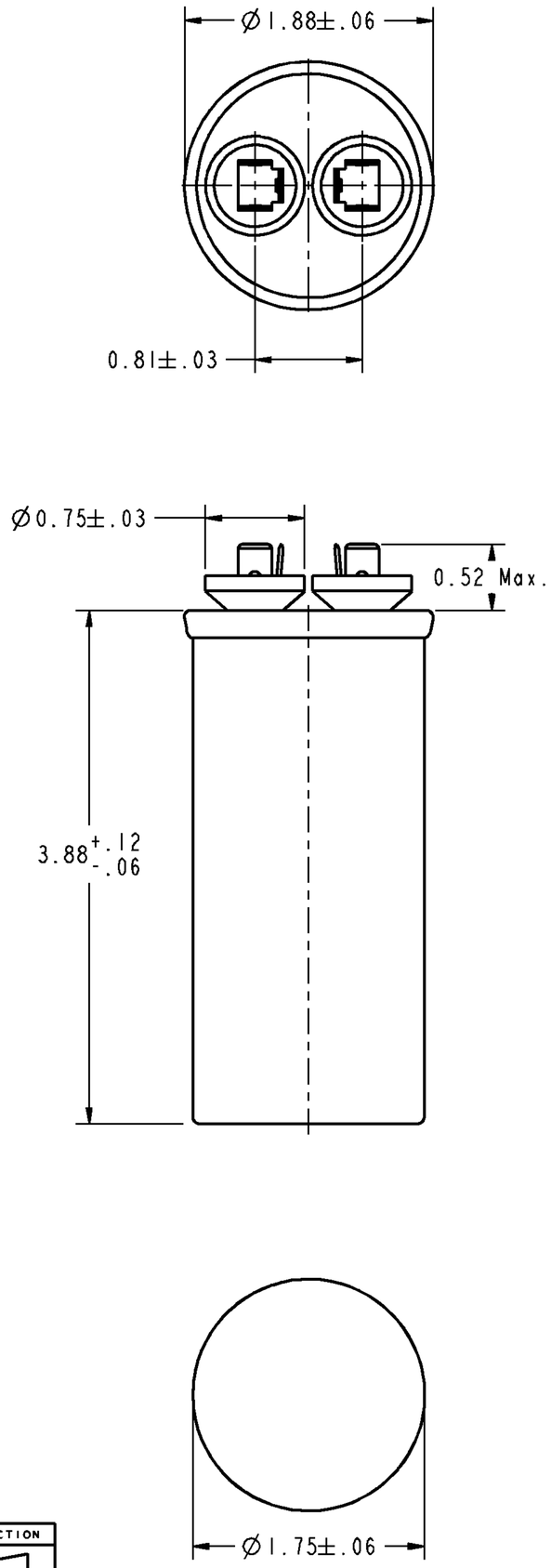


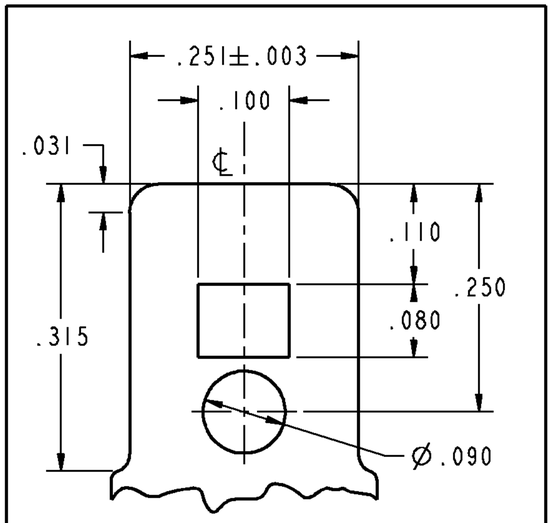


**BLADE DETAILS**

SCALE 8.000

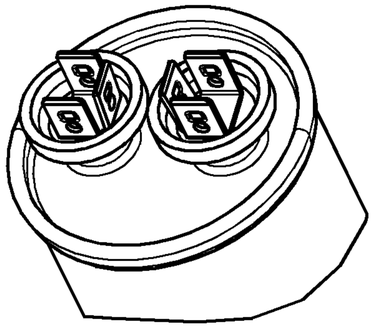

SCALE 1.500

## SPECIFICATIONS :

"GEM-III Capacitors are manufactured with High Grade Metallized Polypropylene Film"

| | |
|---|---|
| Main Capacitance | : 30.00μF±6% |
| Secondary Capacitance | : NIL |
| Volts | :370AC |
| Leakage Current | :30μA Max. |
| Frequency | :50/60 HZ |
| Operating Temperature | :-40 DEG C TO 70 DEG C |
| Storage Temperature | :-40 DEG C TO 90 DEG C |
| Operative Life | :60,000 HRS WITH 94% SURVIVAL |
| Dissipation Factor | :0.1% MAX. |
| Case Material | :ALUMINIUM |
| Cover Material | :STEEL TIN PLATED |
| Terminals | : 0.250"x0.031" Quick Connect Blades |
| Dielectric Fluid | :DIELEKTROL VI |
| Internal Protection | : UL RECOGNIZED PSI P10000AFC |

THIRD ANGLE PROJECTION

FOR ADDITIONAL INFO REFER TO:
APPLIED PRACTICES .
UNLESS OTHERWISE SPECIFIED DIMENSIONS ARE IN INCHES
TOLERANCE ON:
1 PL DECIMALS ± 0.1
2 PL DECIMALS ± 0.01
3 PL DECIMALS ± 0.001
ANGLES ± 0.5
FRACTIONS ± .
FINISH ✓
MATERIAL .

| SIGNATURES | | DATE |
|---|---|---|
| MODEL | NPS | 06/23/09 |
| DETAIL | NPS | 06/22/09 |
| CHECKED | HV | 06/22/09 |
| ENGRG | . | . |
| MFG | . | . |
| QUALITY | . | . |
| ISSUED | . | . |

SOLID MODEL: CAPACITOR_ASSEMBLY

REGAL BELOIT — REGAL-BELOIT CORPORATION

TITLE
# GEM III CAPACITOR
## OUTLINE DRAWING

| SIZE | DRAWING | REV |
|---|---|---|
| C | 97F9608 | 2 |

SCALE: 1.250 | REF. No: . | SHEET 1 OF 1