RF360 Europe GmbH

A Qualcomm – TDK Joint Venture

SAW components

SAW multiplexer

LTE band 1 + LTE band 3

Series/type:	B8967
Ordering code:	B39212B8967P810
Date:	April 13, 2016
Version:	2.0

RF360 products mentioned within this document are offered by RF360 Europe GmbH and other subsidiaries of RF360 Holdings Singapore Pte. Ltd. (collectively, the “RF360 Subsidiaries”). RF360 Holdings Singapore Pte. Ltd. is a joint venture of Qualcomm Global Trading Pte. Ltd. and EPCOS AG. References in this documentation to EPCOS AG should properly reference, and shall be read to reference, the RF360 Subsidiaries.

RF360 Europe GmbH, Anzinger Str. 13, München, Germany

© 2016 RF360 Europe GmbH and/or its affiliated companies. All rights reserved.

These materials, including the information contained herein, may be used only for informational purposes by the customer. The RF360 Subsidiaries assume no responsibility for errors or omissions in these materials or the information contained herein. The RF360 Subsidiaries reserve the right to make changes to the product(s) or information contained herein without notice. The materials and information are provided on an AS IS basis, and the RF360 Subsidiaries assume no liability and make no warranty or representation, either expressed or implied, with respect to the materials, or any output or results based on the use, application, or evaluation of such materials, including, without limitation, with respect to the non-infringement of trademarks, patents, copyrights or any other intellectual property rights or other rights of third parties.

No use of this documentation or any information contained herein grants any license, whether express, implied, by estoppel or otherwise, to any intellectual property rights, including, without limitation, to any patents owned by QUALCOMM Incorporated or any of its subsidiaries.

Not to be used, copied, reproduced, or modified in whole or in part, nor its contents revealed in any manner to others without the express written permission of RF360 Europe GmbH.

Qualcomm and Qualcomm RF360 are trademarks of Qualcomm Incorporated, registered in the United States and other countries. RF360 is a trademark of Qualcomm Incorporated. Other product and brand names may be trademarks or registered trademarks of their respective owners.

This technical data may be subject to U.S. and international export, re-export, or transfer (“export”) laws. Diversion contrary to U.S. and international law is strictly prohibited.

SAW components

SAW multiplexer

LTE band 1 + LTE band 3

Series/type:	B8967
Ordering code:	B39212B8967P810

Date:	April 13, 2016
Version:	2.0

© EPCOS AG 2016. Reproduction, publication and dissemination of this data sheet, enclosures hereto and the information contained therein without EPCOS' prior express consent is prohibited.

EPCOS AG is a TDK Group Company.

Table of contents

1 Application....3
2 Features....3
3 Package....4
4 Pin configuration....4
5 Matching circuit....5
6 Characteristics LTE B1....6
7 Characteristics LTE B3....9
8 Characteristics cross-isolations....12
9 Maximum ratings....14
10 Transmission coefficients LTE B1....15
11 Reflection coefficients LTE B1....18
12 Transmission coefficients LTE B3....19
13 Reflection coefficients LTE B3....22
14 Transmission coefficients cross-isolations....23
15 Packing material....25
16 Marking....28
17 Soldering profile....30
18 Annotations....31
19 Cautions and warnings....32
Important notes....33

1 Application

- Low-loss SAW multiplexer for mobile telephone LTE Band 1 and Band 3 systems, also suitable for WCDMA applications
- Usable pass bands: 60 MHz for Band 1 and 75 MHz for Band 3
- High out of band selectivity
- High TX-RX isolation
- Unbalanced to unbalanced operation
- Terminating impedances 50 Ω

Figure 1: Picture of component with example of product marking.

2 Features

- Package size 3.0±0.1 mm × 2.0±0.1 mm
- Package height 0.5 mm (max.)
- Approximate weight 0.01 g
- RoHS compatible
- Package for Surface Mount Technology (SMT)
- Ni/Au-plated terminals
- Electrostatic Sensitive Device (ESD)
- Moisture Sensitivity Level 3 (MSL3)

3 Package

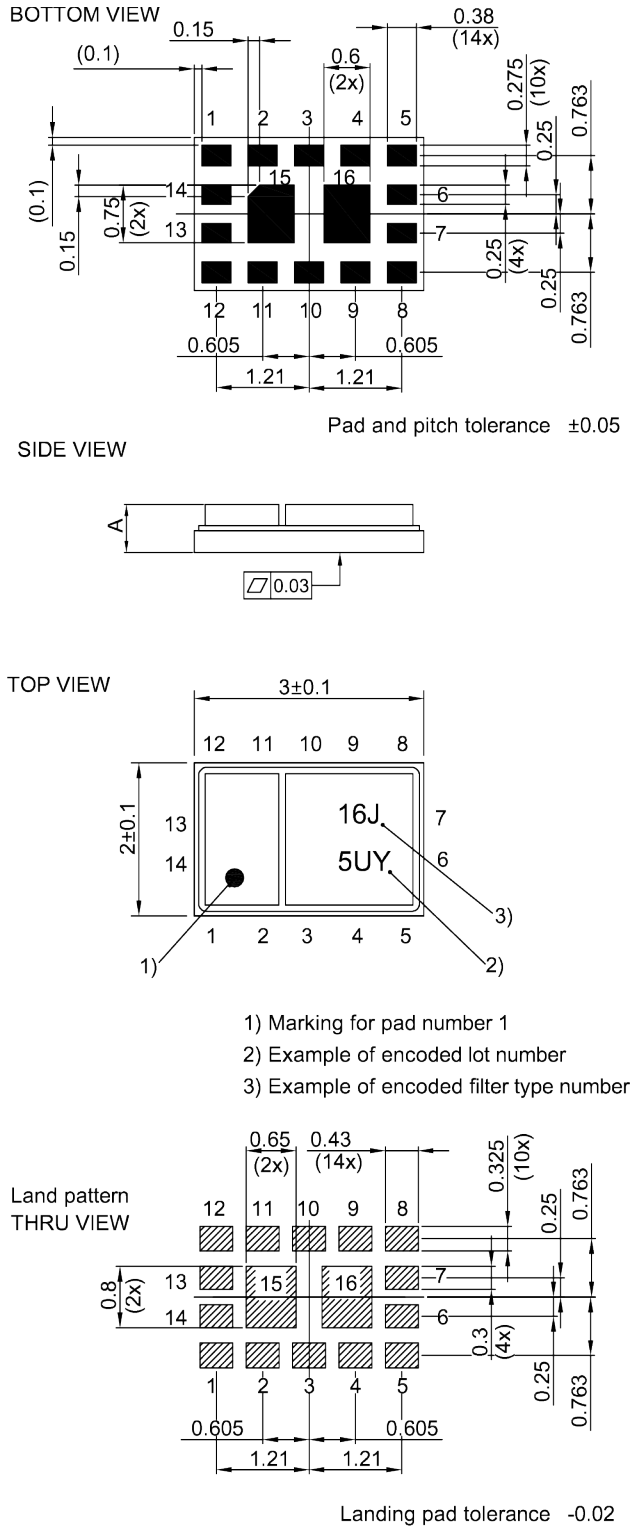

Figure 2: Drawing of package with package height A = 0.5 mm (max.). See Sec. Package information (p. 32).

4 Pin configuration

■ 1	RX (B3)
■ 5	TX (B1)
■ 8	TX (B3)
■ 10	ANT (B1 & B3)
■ 12	RX (B1)
■ 2, 3, 4, 6, 7, 9, 11, 13, 14, 15, 16	Ground

5 Matching circuit

- C_{p8b} = 1.4 pF
- L_{p1} = 4.7 nH
- L_{p5} = 6.2 nH
- L_{p10} = 1.8 nH
- L_{p12} = 4.2 nH
- L_{s8a} = 4.7 nH

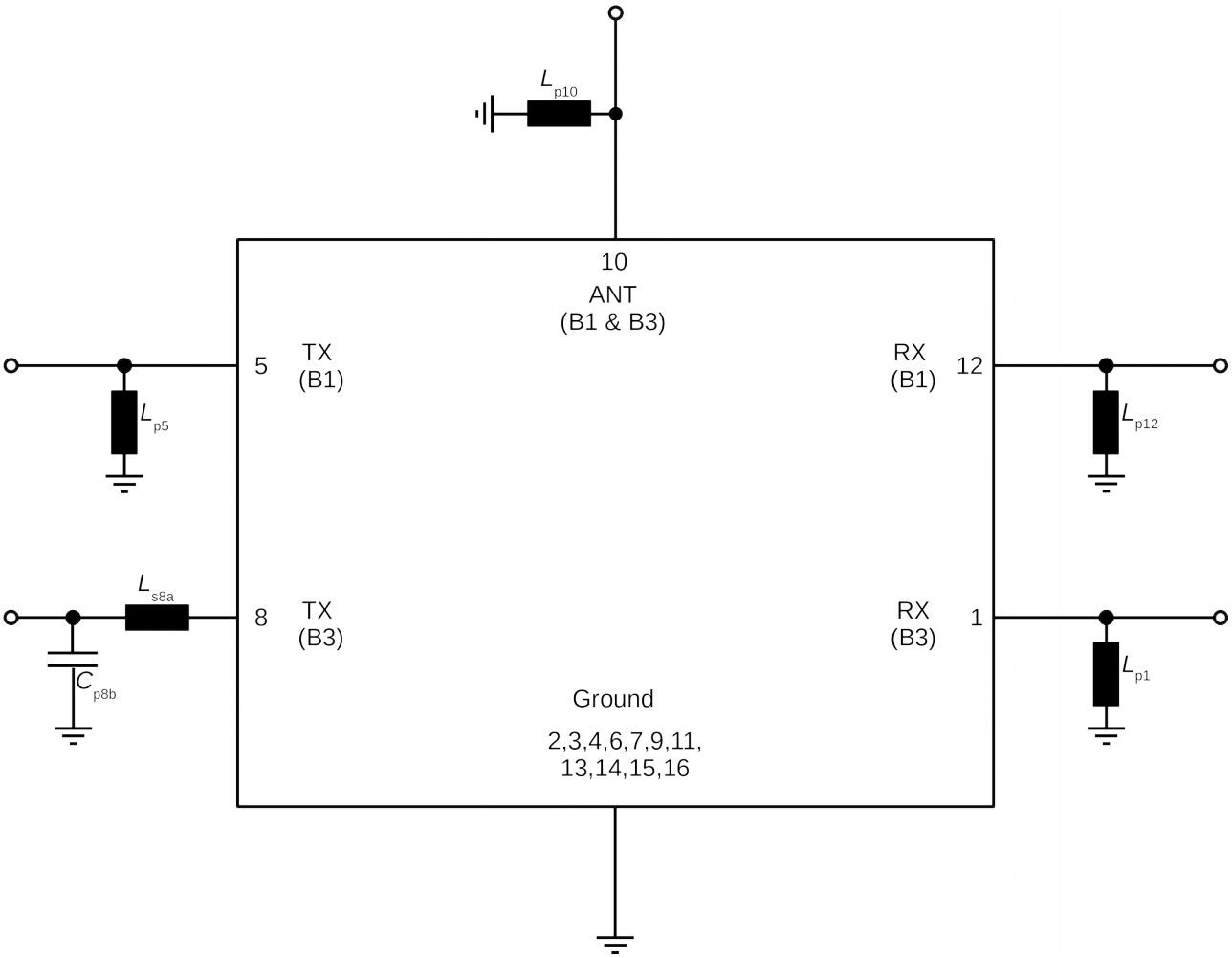

Figure 3: Schematic of matching circuit.

6 Characteristics LTE B1

6.1 TX – ANT

Temperature range for specification	T_{SPEC}	= −30 °C ... +85 °C
B1 TX terminating impedance	$Z_{B1\ TX}$	= 50 Ω with par. 6.2 nH[1)]
ANT terminating impedance	Z_{ANT}	= 50 Ω with par. 1.8 nH[1)]
B1 RX terminating impedance	$Z_{B1\ RX}$	= 50 Ω with par. 4.2 nH[1)]

Characteristics LTE B1 TX – ANT				**min.** for T_{SPEC}	**typ.** @+25 °C	**max.** for T_{SPEC}	
Center frequency			f_C	—	1950	—	MHz
Maximum insertion attenuation			α_{max}				
	1920... 1980	MHz		—	2.1	3.5	dB
Amplitude ripple (p-p)			$\Delta\alpha$				
	1920... 1980	MHz		—	0.7	—	dB
Maximum VSWR			$VSWR_{max}$				
@ B1 TX port	1920... 1980	MHz		—	1.4	2.0	
@ ANT port	1920... 1980	MHz		—	1.4	2.0	
Minimum attenuation			α_{min}				
	10... 1574	MHz		35	41	—	dB
	420... 494	MHz		50	70	—	dB
	843... 960	MHz		48	55	—	dB
	1226... 1250	MHz		42	47	—	dB
	1496... 1511	MHz		37	41	—	dB
	1559... 1586	MHz		37	41	—	dB
	1597... 1710	MHz		37	40	—	dB
	1710... 1785	MHz		40	46	—	dB
	1805... 1879.76	MHz		46	56	—	dB
	2110... 2170	MHz		44	52	—	dB
	2400... 2496	MHz		36	49	—	dB
	2496... 2690	MHz		42	51	—	dB
	3830... 3960	MHz		30	42	—	dB
	4900... 5740	MHz		30	41	—	dB
	5740... 5950	MHz		20	41	—	dB

[1)] See Sec. Matching circuit (p. 5).

6.2 ANT – RX

Temperature range for specification	T_{SPEC}	= −30 °C ... +85 °C
B1 TX terminating impedance	$Z_{B1\ TX}$	= 50 Ω with par. 6.2 nH[1)]
ANT terminating impedance	Z_{ANT}	= 50 Ω with par. 1.8 nH[1)]
B1 RX terminating impedance	$Z_{B1\ RX}$	= 50 Ω with par. 4.2 nH[1)]

Characteristics LTE B1 ANT – RX				**min.** for T_{SPEC}	**typ.** @+25 °C	**max.** for T_{SPEC}	
Center frequency			f_C	—	2140	—	MHz
Maximum insertion attenuation			α_{max}				
	2110... 2170	MHz		—	2.2	2.9	dB
Amplitude ripple (p-p)			$\Delta\alpha$				
	2110... 2170	MHz		—	0.5	—	dB
Maximum VSWR			$VSWR_{max}$				
@ ANT port	2110... 2170	MHz		—	1.5	2.0	
@ B1 RX port	2110... 2170	MHz		—	1.4	2.0	
Minimum attenuation			α_{min}				
	10... 1920	MHz		40	52	—	dB
	190	MHz		50	80	—	dB
	814... 915	MHz		50	68	—	dB
	1710... 1785	MHz		40	59	—	dB
	1920... 1980	MHz		45	56	—	dB
	1980... 2015	MHz		15	55	—	dB
	2015... 2050	MHz		23	36	—	dB
	2050... 2075	MHz		6	10	—	dB
	2255... 2690	MHz		40	48	—	dB
	4030... 4150	MHz		40	50	—	dB
	4220... 4340	MHz		40	49	—	dB
	4900... 5950	MHz		39	45	—	dB

1) See Sec. Matching circuit (p. 5).

6.3 TX – RX

Temperature range for specification	T_{SPEC}	= −30 °C ... +85 °C
B1 TX terminating impedance	$Z_{B1\ TX}$	= 50 Ω with par. 6.2 nH[1)]
ANT terminating impedance	Z_{ANT}	= 50 Ω with par. 1.8 nH[1)]
B1 RX terminating impedance	$Z_{B1\ RX}$	= 50 Ω with par. 4.2 nH[1)]

Characteristics LTE B1 TX – RX				**min.** for T_{SPEC}	**typ.** @+25 °C	**max.** for T_{SPEC}	
Minimum isolation			α_{min}				
	1920... 1980	MHz		52	59	—	dB
	2110... 2170	MHz		50	54	—	dB

1) See Sec. Matching circuit (p. 5).

7 Characteristics LTE B3

7.1 TX – ANT

Temperature range for specification	T_{SPEC}	= −30 °C ... +85 °C
B3 TX terminating impedance	$Z_{B3\ TX}$	= 50 Ω with par. 1.4 pF & ser. 4.7 nH[1)]
ANT terminating impedance	Z_{ANT}	= 50 Ω with par. 1.8 nH[1)]
B3 RX terminating impedance	$Z_{B3\ RX}$	= 50 Ω with par. 4.7 nH[1)]

Characteristics LTE B3 TX – ANT				**min.** for T_{SPEC}	**typ.** @+25 °C	**max.** for T_{SPEC}	
Center frequency			f_C	—	1747.5	—	MHz
Maximum insertion attenuation			α_{max}				
	1710... 1785	MHz		—	2.2	4.1	dB
	1710.24... 1784.76	MHz		—	2.2	4.0	dB
Amplitude ripple (p-p)			Δα				
	1710... 1785	MHz		—	1.2	—	dB
Maximum VSWR			$VSWR_{max}$				
@ B3 TX port	1710... 1785	MHz		—	1.3	2.0	
@ ANT port	1710... 1785	MHz		—	1.6	2.0	
Minimum attenuation			α_{min}				
	10... 1566	MHz		39	43	—	dB
	925... 960	MHz		44	48	—	dB
	1226... 1250	MHz		40	44	—	dB
	1559... 1586	MHz		40	49	—	dB
	1597... 1606	MHz		37	47	—	dB
	1805... 1810	MHz		36[2)]	53	—	dB
	1805.24... 1810	MHz		38[2)]	53	—	dB
	1810... 1880	MHz		43[2)]	53	—	dB
	1920... 1980	MHz		35	45	—	dB
	2110... 2170	MHz		35	47	—	dB
	2400... 2496	MHz		30	38	—	dB
	2496... 2690	MHz		37	41	—	dB
	3420... 3570	MHz		35	39	—	dB
	4900... 5950	MHz		27	31	—	dB
	5100... 5385	MHz		27	36	—	dB

1) See Sec. Matching circuit (p. 5).
2) Valid for temperature T_{SPEC} = +25 °C...+85 °C.

7.2 ANT – RX

Temperature range for specification	T_{SPEC}	= −30 °C ... +85 °C
B3 TX terminating impedance	$Z_{B3\ TX}$	= 50 Ω with par. 1.4 pF & ser. 4.7 nH[1)]
ANT terminating impedance	Z_{ANT}	= 50 Ω with par. 1.8 nH[1)]
B3 RX terminating impedance	$Z_{B3\ RX}$	= 50 Ω with par. 4.7 nH[1)]

Characteristics LTE B3 ANT – RX				**min.** for T_{SPEC}	**typ.** @+25 °C	**max.** for T_{SPEC}	
Center frequency			f_C	—	1842.5	—	MHz
Maximum insertion attenuation			α_{max}				
	1805... 1880	MHz		—	2.6	4.7	dB
	1805.24... 1879.76	MHz		—	2.6	3.7[2)]	dB
	1805.24... 1879.76	MHz		—	2.6	4.6	dB
Amplitude ripple (p-p)			$\Delta\alpha$				
	1805... 1880	MHz		—	1.6	—	dB
Maximum VSWR			$VSWR_{max}$				
@ ANT port	1805... 1880	MHz		—	1.6	2.1[3)]	
@ B3 RX port	1805... 1880	MHz		—	1.7	2.2[3)]	
Minimum attenuation			α_{min}				
	10... 1710	MHz		39	43	—	dB
	95	MHz		50	80	—	dB
	814... 915	MHz		50	62	—	dB
	1615... 1690	MHz		39	43	—	dB
	1710... 1780	MHz		45	54	—	dB
	1780... 1784.76	MHz		40	54	—	dB
	1780... 1785	MHz		38	54	—	dB
	1785... 1790	MHz		7	56	—	dB
	1920... 2400	MHz		40	44	—	dB
	2400... 2496	MHz		40	46	—	dB
	2496... 2690	MHz		39	45	—	dB
	2690... 3515	MHz		40	52	—	dB
	3515... 3760	MHz		45	58	—	dB
	4900... 5950	MHz		45	64	—	dB

1) See Sec. Matching circuit (p. 5).
2) Valid for temperature T_{SPEC} = +25 °C.
3) Valid for temperature T_{SPEC} = +25 °C...+85 °C.

7.3 TX – RX

Temperature range for specification	T_{SPEC}	= −30 °C ... +85 °C
B3 TX terminating impedance	$Z_{B3\ TX}$	= 50 Ω with par. 1.4 pF & ser. 4.7 nH[1)]
ANT terminating impedance	Z_{ANT}	= 50 Ω with par. 1.8 nH[1)]
B3 RX terminating impedance	$Z_{B3\ RX}$	= 50 Ω with par. 4.7 nH[1)]

Characteristics LTE B3 TX – RX			**min.** for T_{SPEC}	**typ.** @+25 °C	**max.** for T_{SPEC}	
Minimum isolation		α_{min}				
1710... 1780	MHz		52	56	—	dB
1780... 1784.76	MHz		47	56	—	dB
1780... 1785	MHz		45	56	—	dB
1805... 1810	MHz		42[2)]	56	—	dB
1805.24... 1810	MHz		44[2)]	56	—	dB
1810... 1880	MHz		50[2)]	56	—	dB

1) See Sec. Matching circuit (p. 5).
2) Valid for temperature T_{SPEC} = +25 °C...+85 °C.

8 Characteristics cross-isolations

8.1 LTE B1 TX – LTE B3 RX

Temperature range for specification	T_{SPEC}	= −30 °C ... +85 °C
B1 TX terminating impedance	$Z_{B1\ TX}$	= 50 Ω with par. 6.2 nH[1)]
B3 RX terminating impedance	$Z_{B3\ RX}$	= 50 Ω with par. 4.7 nH[1)]

Characteristics cross-isolation LTE B1 TX – LTE B3 RX			**min.** for T_{SPEC}	**typ.** @+25 °C	**max.** for T_{SPEC}	
Minimum cross-isolation		α_{min}				
	1805.24... 1879.76	MHz	55	59	—	dB
	1920... 1980	MHz	52[2)]	59	—	dB

1) See Sec. Matching circuit (p. 5).
2) Valid for temperature T_{SPEC} = +25 °C...+85 °C.

8.2 LTE B3 TX – LTE B1 RX

Temperature range for specification	T_{SPEC}	= −30 °C ... +85 °C
B3 TX terminating impedance	$Z_{B3\ TX}$	= 50 Ω with par. 1.4 pF & ser. 4.7 nH[1)]
B1 RX terminating impedance	$Z_{B1\ RXk}$	= 50 Ω with par. 4.2 nH[1)]

Characteristics cross-isolation LTE B3 TX – LTE B1 RX			**min.** for T_{SPEC}	**typ.** @+25 °C	**max.** for T_{SPEC}	
Minimum cross-isolation		α_{min}				
	1710.24... 1784.76	MHz	55	61	—	dB
	2110... 2170	MHz	50	55	—	dB

1) See Sec. Matching circuit (p. 5).

9 Maximum ratings

Storage temperature	T_{STG} = −40 °C ... +90 °C	
DC voltage	V_{DC} = 5.0 V (max.)	
ESD voltage		
	V_{ESD} [1] = 250 V (max.)	Human body model.
	V_{ESD} [2] = 600 V (max.)	Charged device model.
	V_{ESD} [3] = 100 V (max.)	Machine model.
Input power	P_{IN}	
@ B1 TX port: 1920 ... 1980 MHz	29 dBm	Continuous wave for 5000 h @ 55 °C.
@ B3 TX port: 1710 ... 1785 MHz	29 dBm	Continuous wave for 5000 h @ 55 °C.

[1] According to JESD22-A114F (HBM – Human Body Model), 1 negative & 1 positive pulse.
[2] According to JESD22-C101C (CDM – Field Induced Charged Device Model), 3 negative & 3 positive pulses.
[3] According to JESD22-A115B (MM – Machine Model), 10 negative & 10 positive pulses.

10 Transmission coefficients LTE B1

10.1 TX – ANT

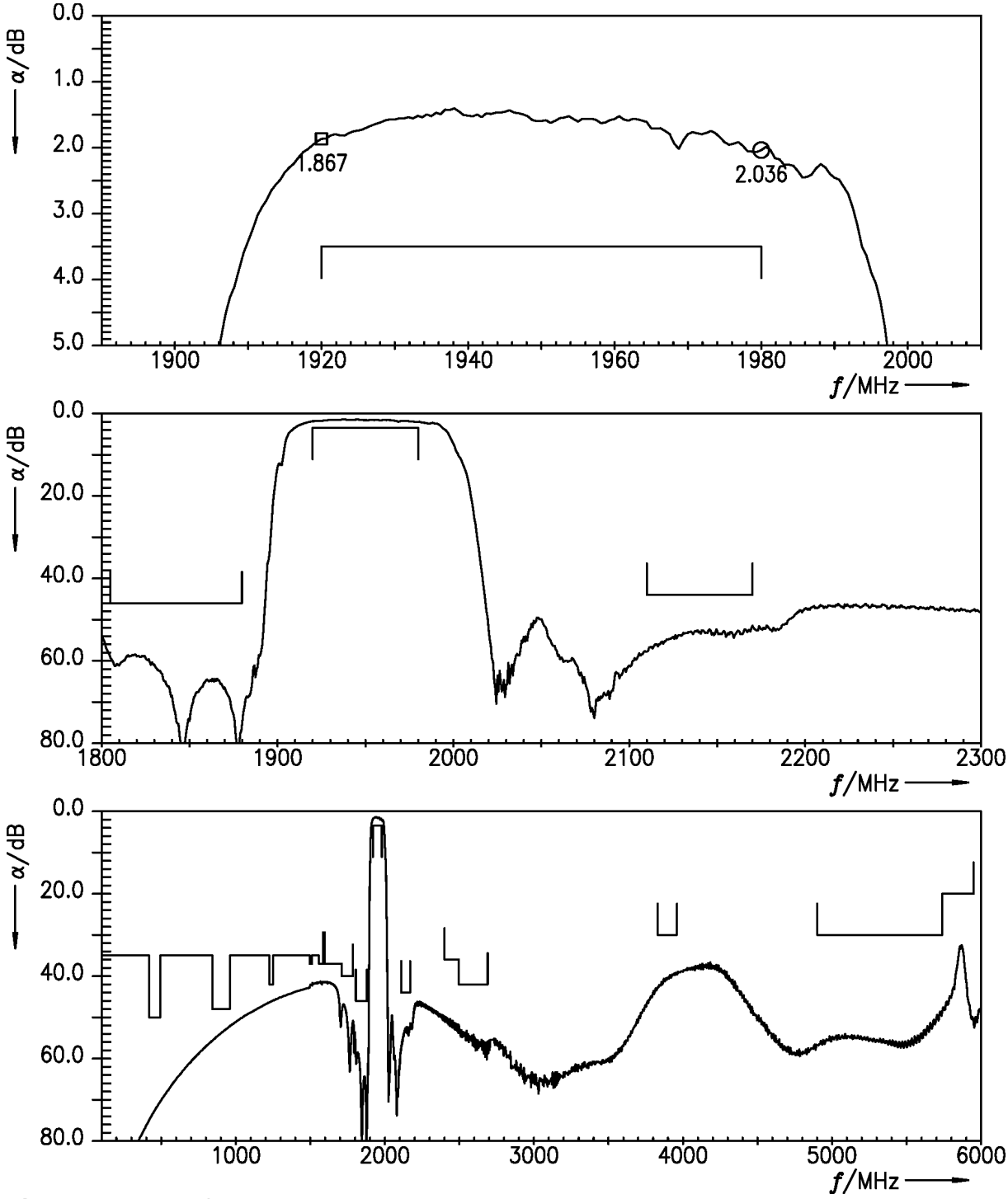

Figure 4: Attenuation LTE B1 TX – ANT.

10.2 ANT – RX

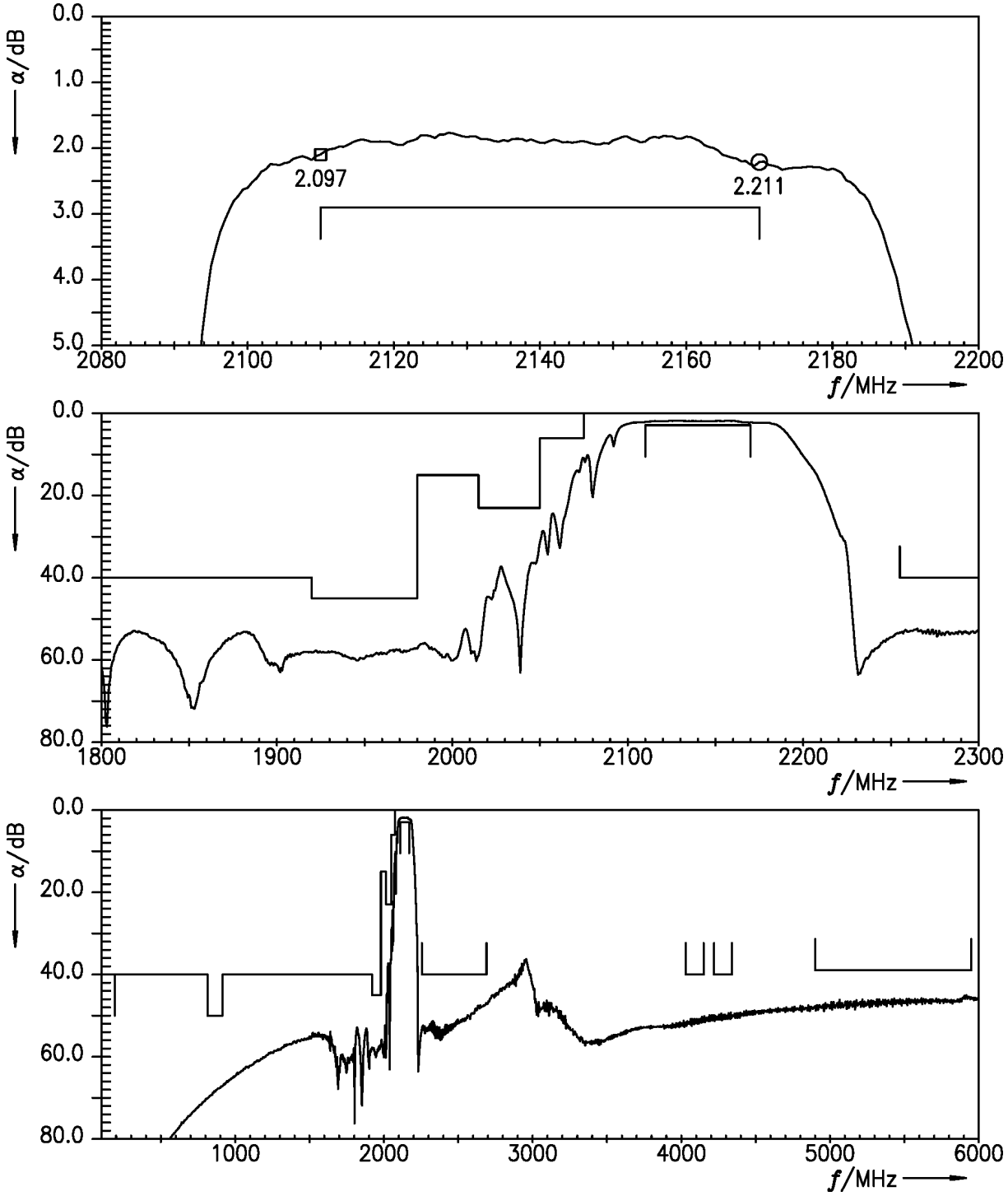

Figure 5: Attenuation LTE B1 ANT – RX.

10.3 TX – RX

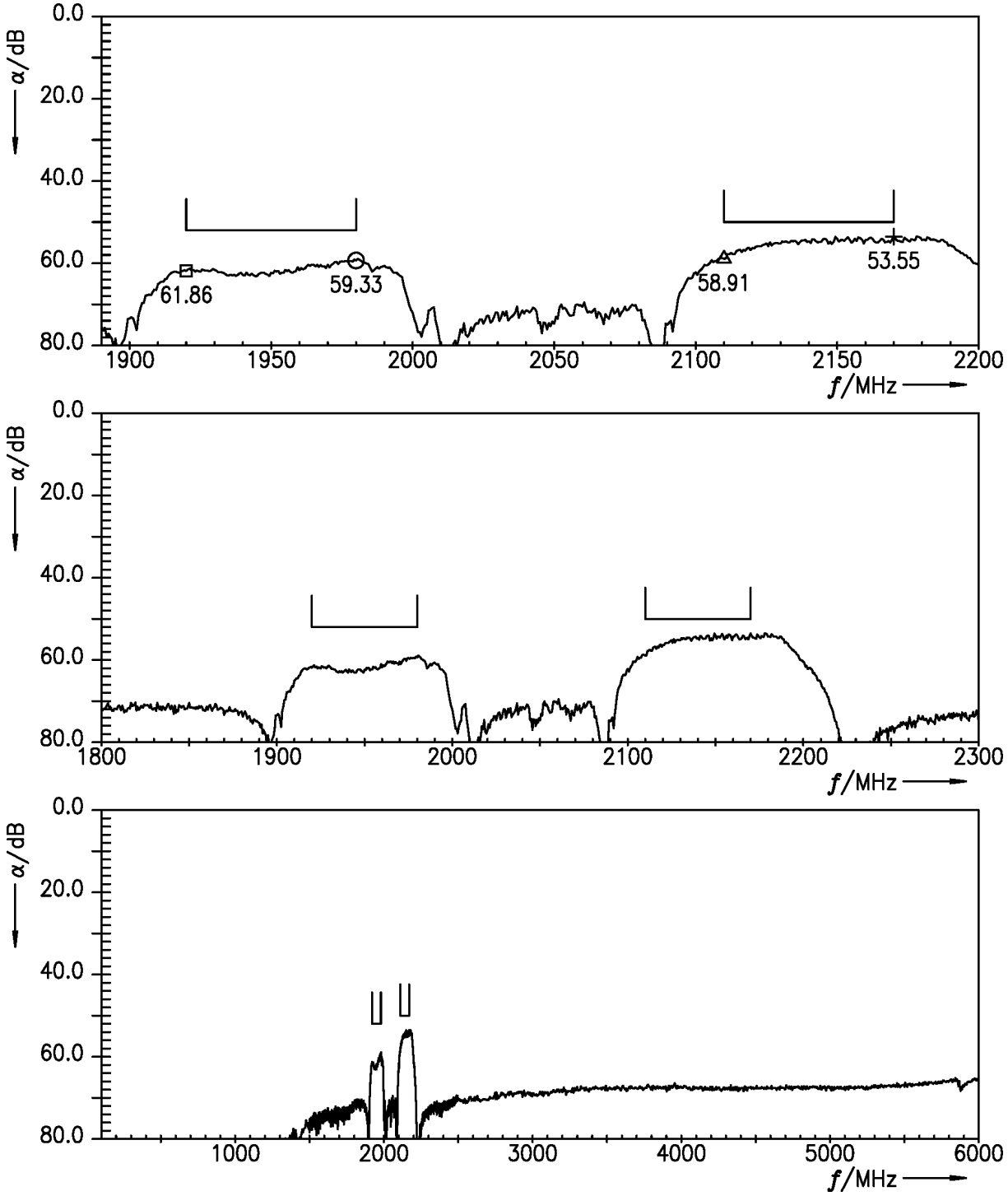

Figure 6: Isolation LTE B1 TX – RX.

11 Reflection coefficients LTE B1

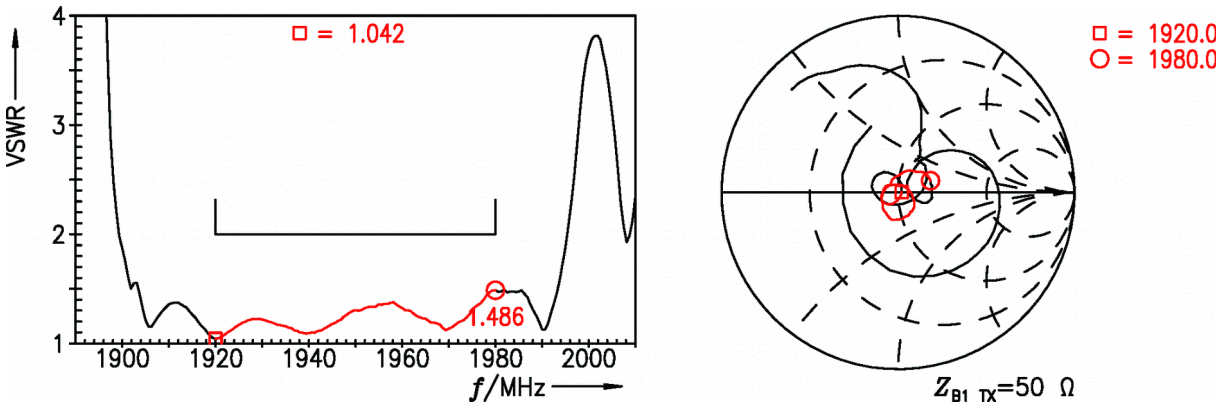

Figure 7: Reflection coefficient LTE B1 at TX port.

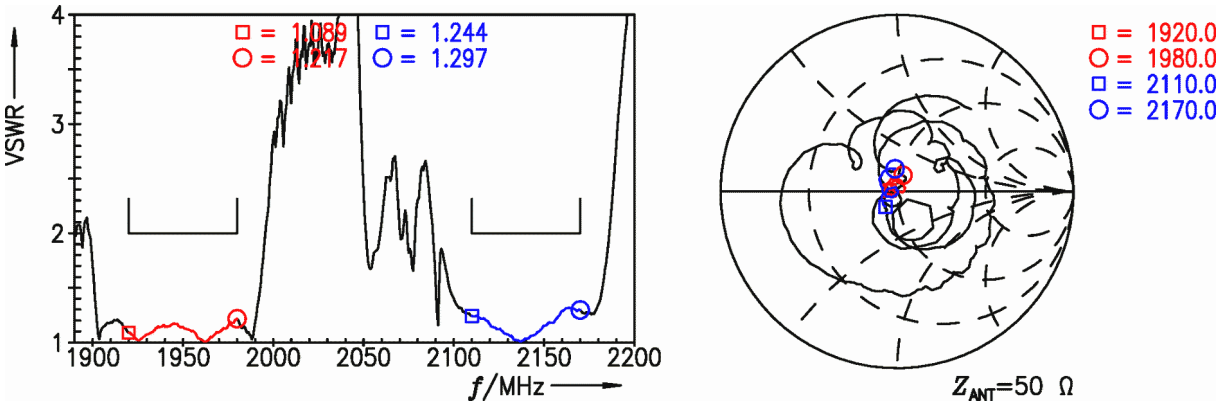

Figure 8: Reflection coefficient LTE B1 at ANT port (TX and RX frequencies).

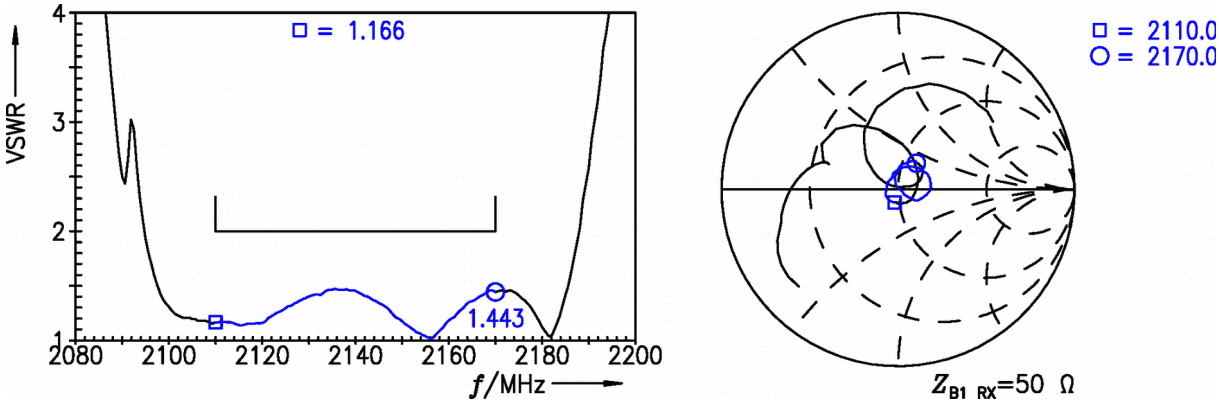

Figure 9: Reflection coefficient LTE B1 at RX port.

12 Transmission coefficients LTE B3

12.1 TX – ANT

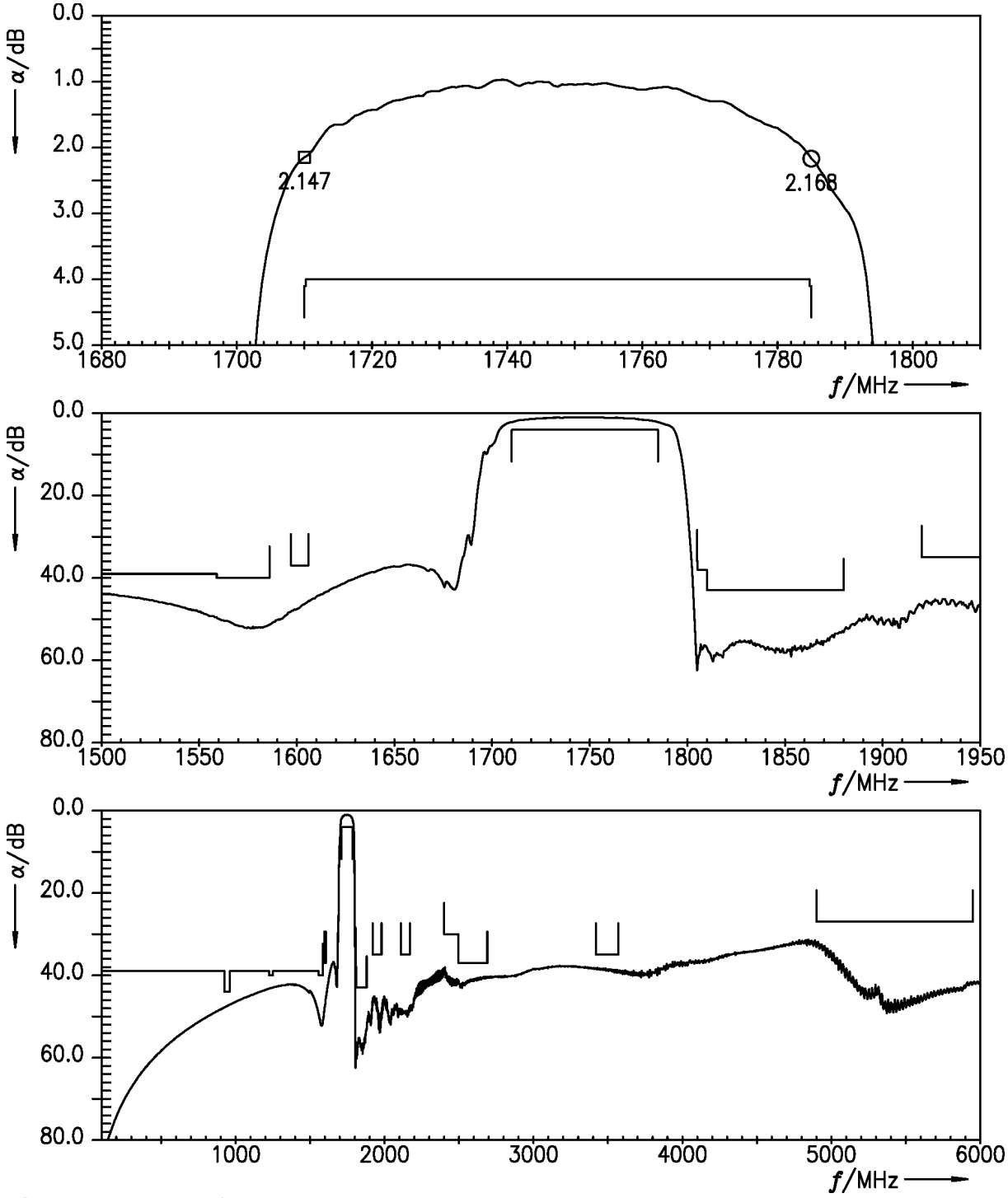

Figure 10: Attenuation LTE B3 TX – ANT.

12.2 ANT – RX

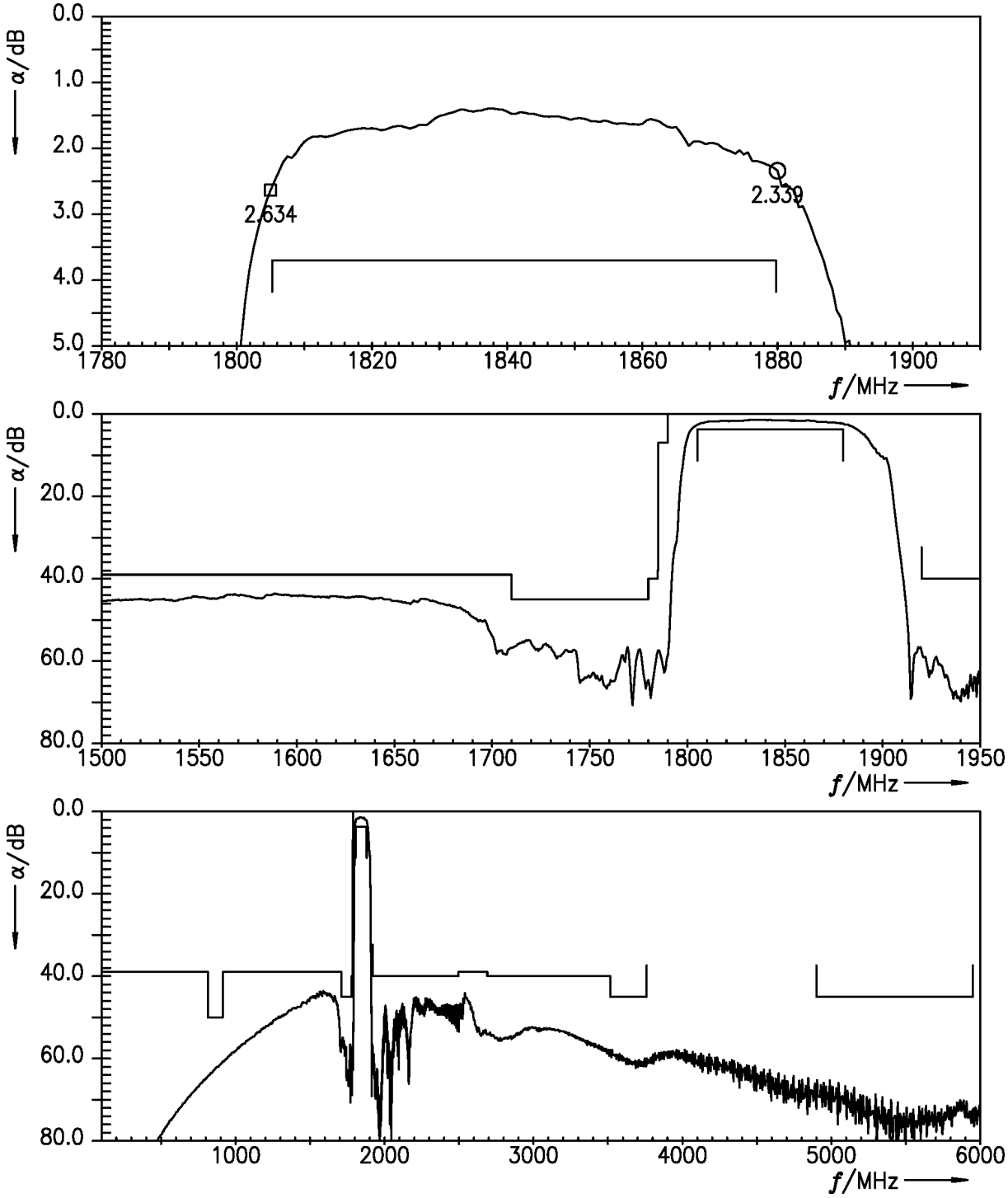

Figure 11: Attenuation LTE B3 ANT – RX.

12.3 TX – RX

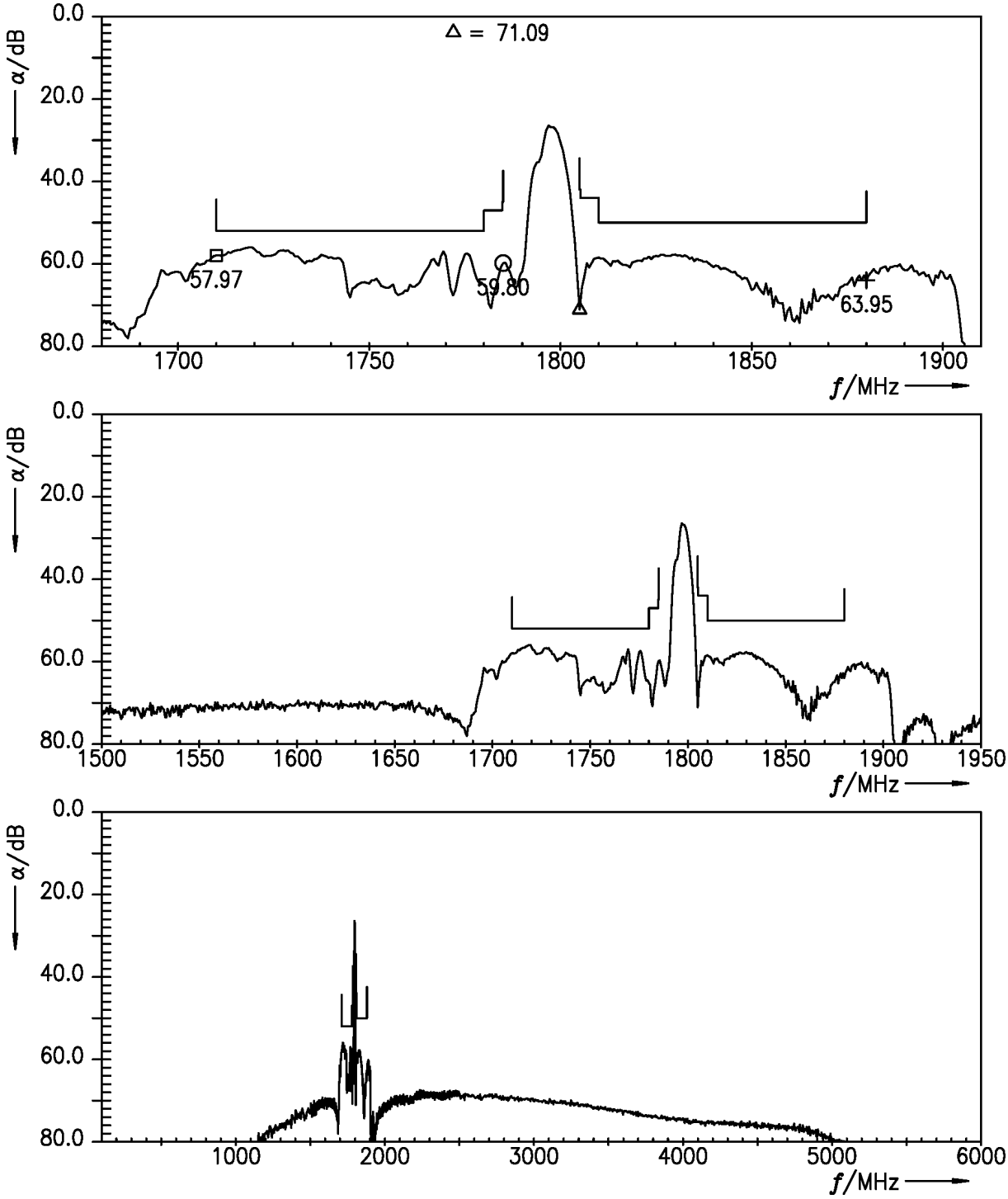

Figure 12: Isolation LTE B3 TX – RX.

13 Reflection coefficients LTE B3

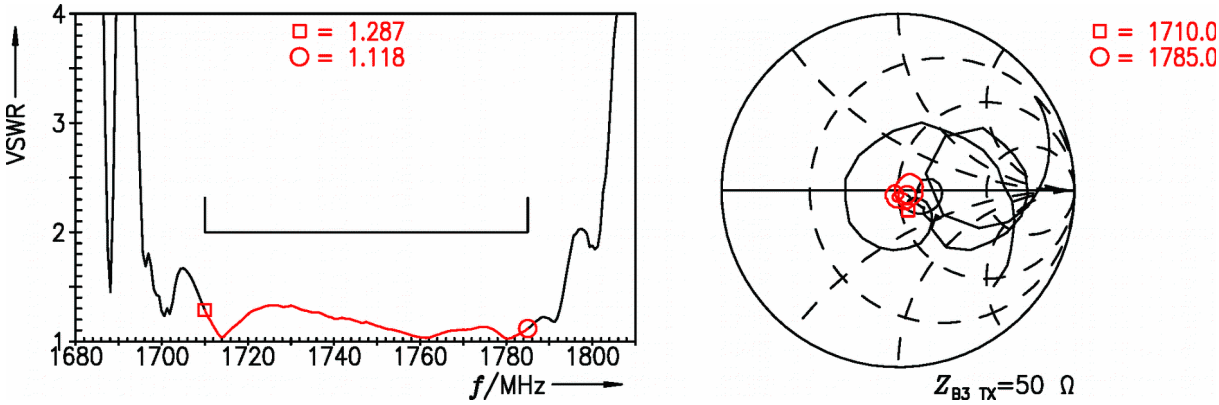

Figure 13: Reflection coefficient LTE B3 at TX port.

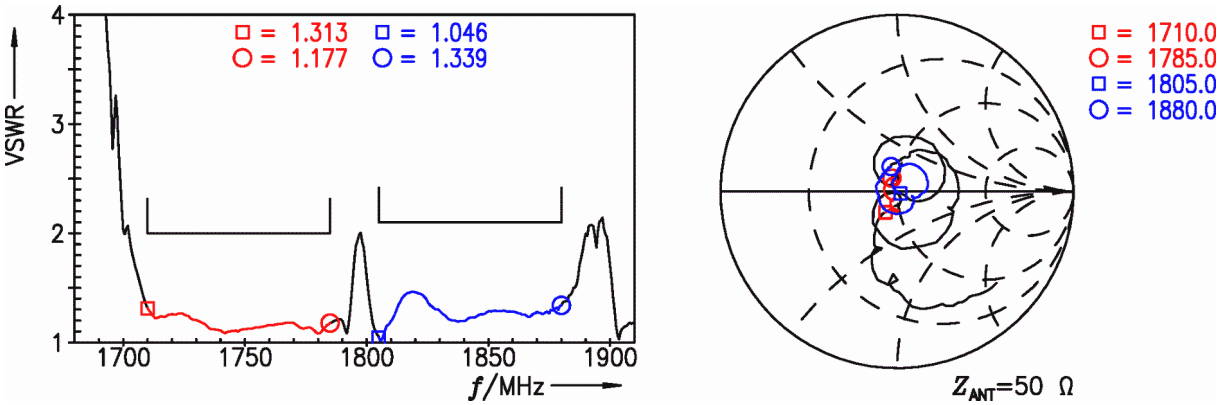

Figure 14: Reflection coefficient LTE B3 at ANT port (TX and RX frequencies).

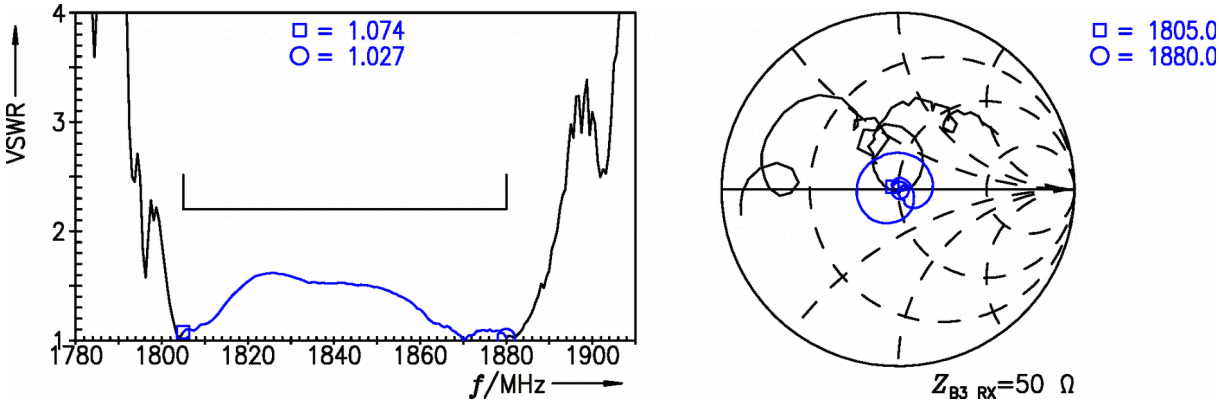

Figure 15: Reflection coefficient LTE B3 at RX port.

14 Transmission coefficients cross-isolations

14.1 LTE B1 TX – LTE B3 RX

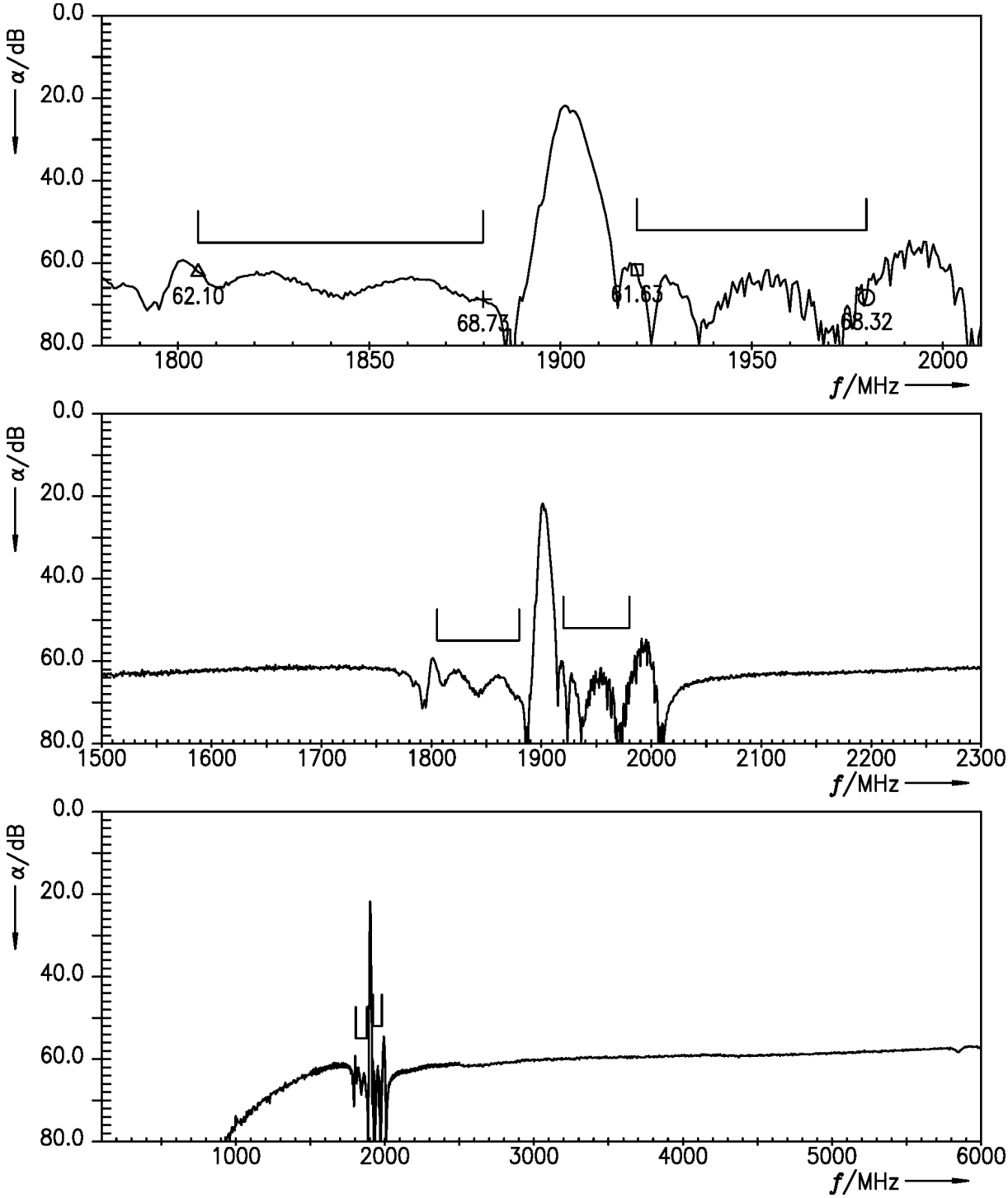

Figure 16: Cross-isolation LTE B1 TX – LTE B3 RX.

14.2 LTE B3 TX – LTE B1 RX

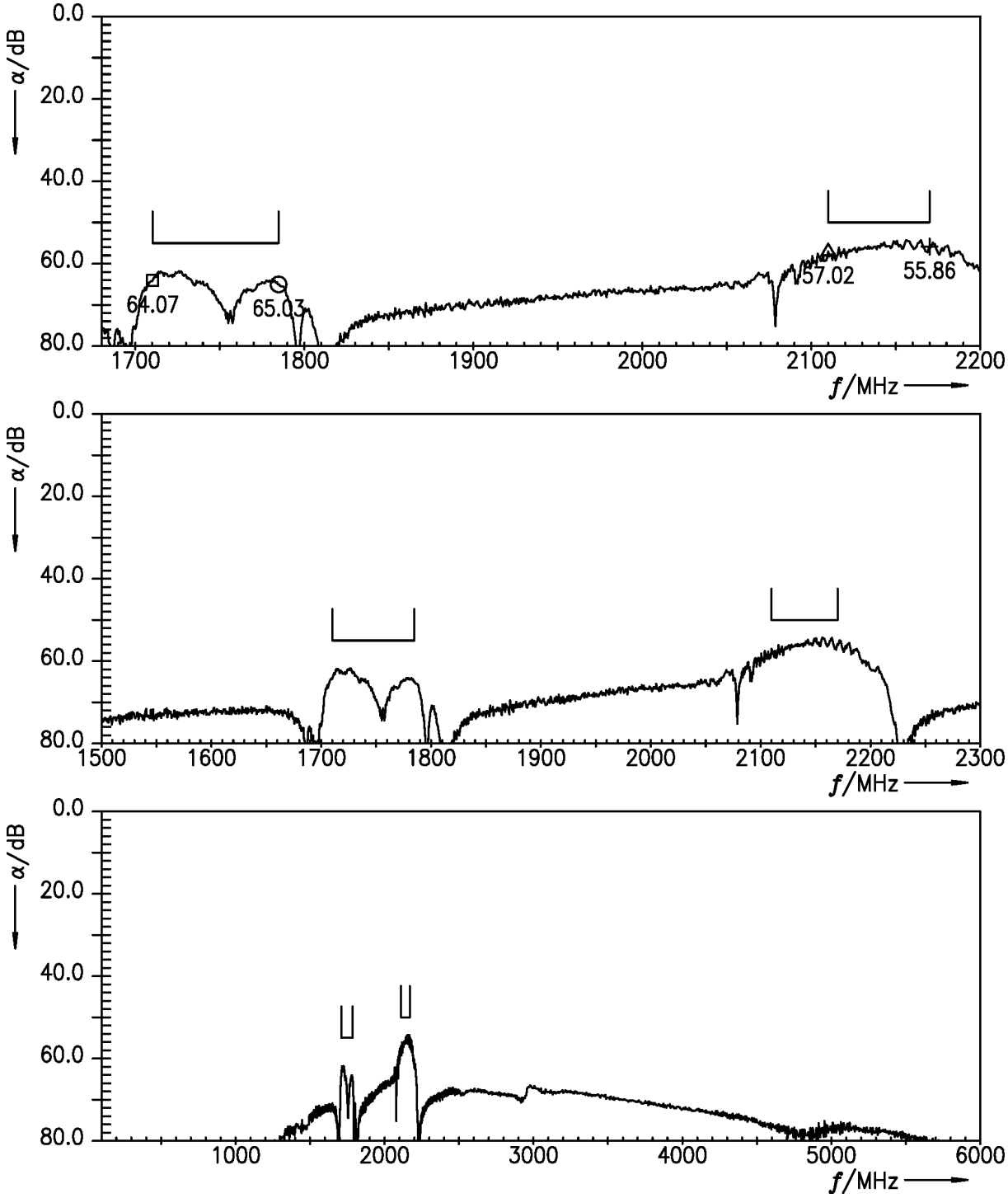

Figure 17: Cross-isolation LTE B3 TX – LTE B1 RX.

15 Packing material

15.1 Tape

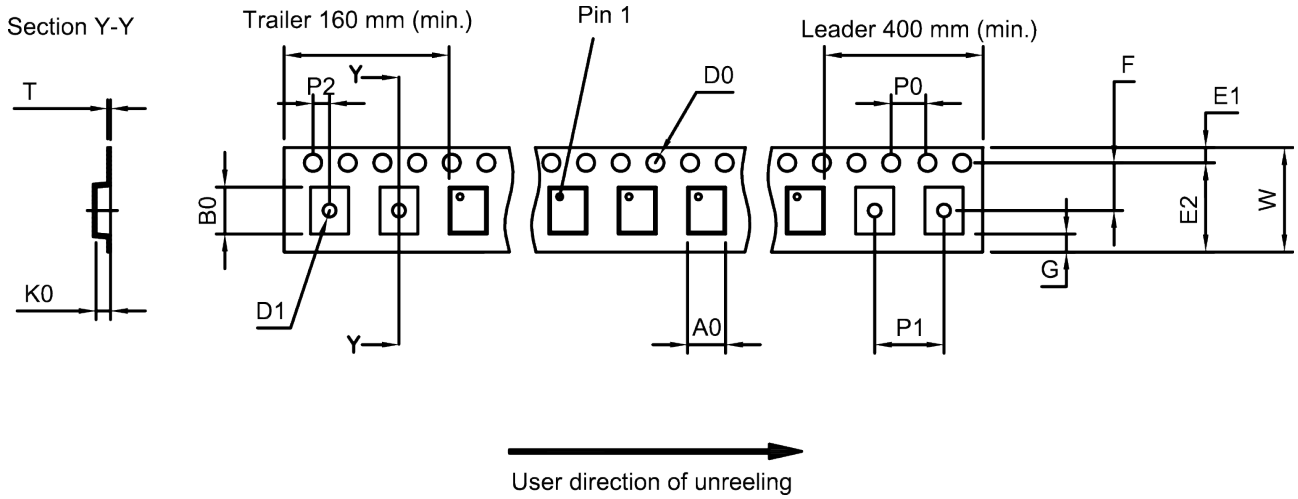

Figure 18: Drawing of tape (first-angle projection) with tape dimensions according to Table 1.

A_0	2.25±0.05 mm
B_0	3.25±0.05 mm
D_0	1.5+0.1/−0 mm
D_1	1.0 mm (min.)
E_1	1.75±0.1 mm

E_2	6.25 mm (min.)
F	3.5±0.05 mm
G	0.75 mm (min.)
K_0	0.6±0.05 mm
P_0	4.0±0.1 mm

P_1	4.0±0.1 mm
P_2	2.0±0.05 mm
T	0.25±0.03 mm
W	8.0+0.3/−0.1 mm

Table 1: Tape dimensions.

15.2 Reel with diameter of 180 mm

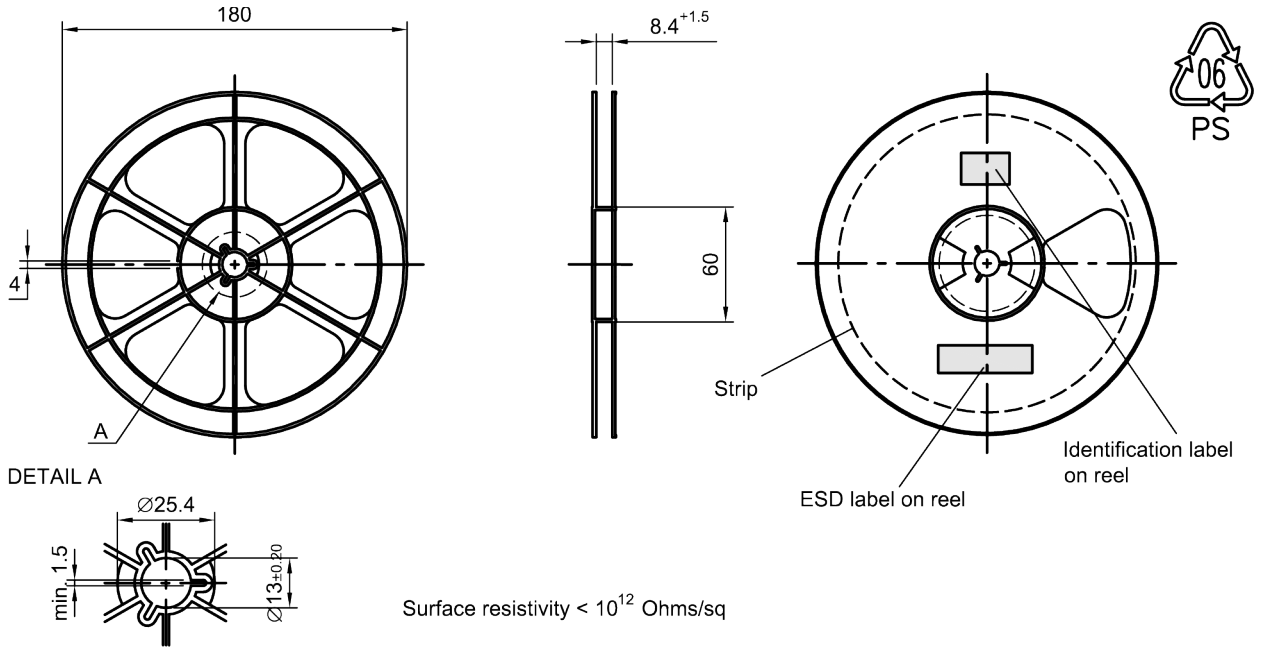

Figure 19: Drawing of reel (first-angle projection) with diameter of 180 mm.

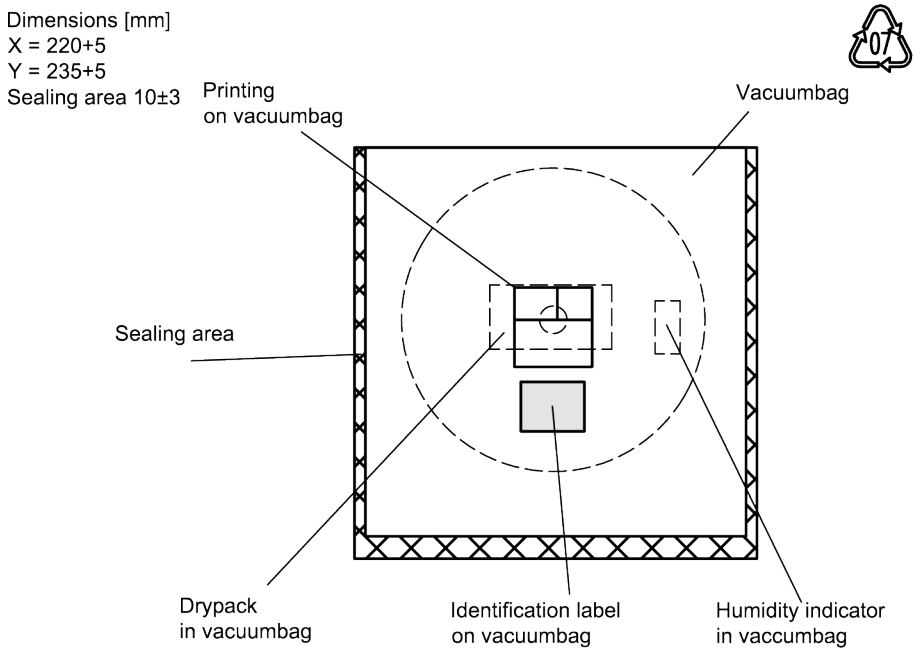

Figure 20: Drawing of moisture barrier bag (MBB) for reel with diameter of 180 mm.

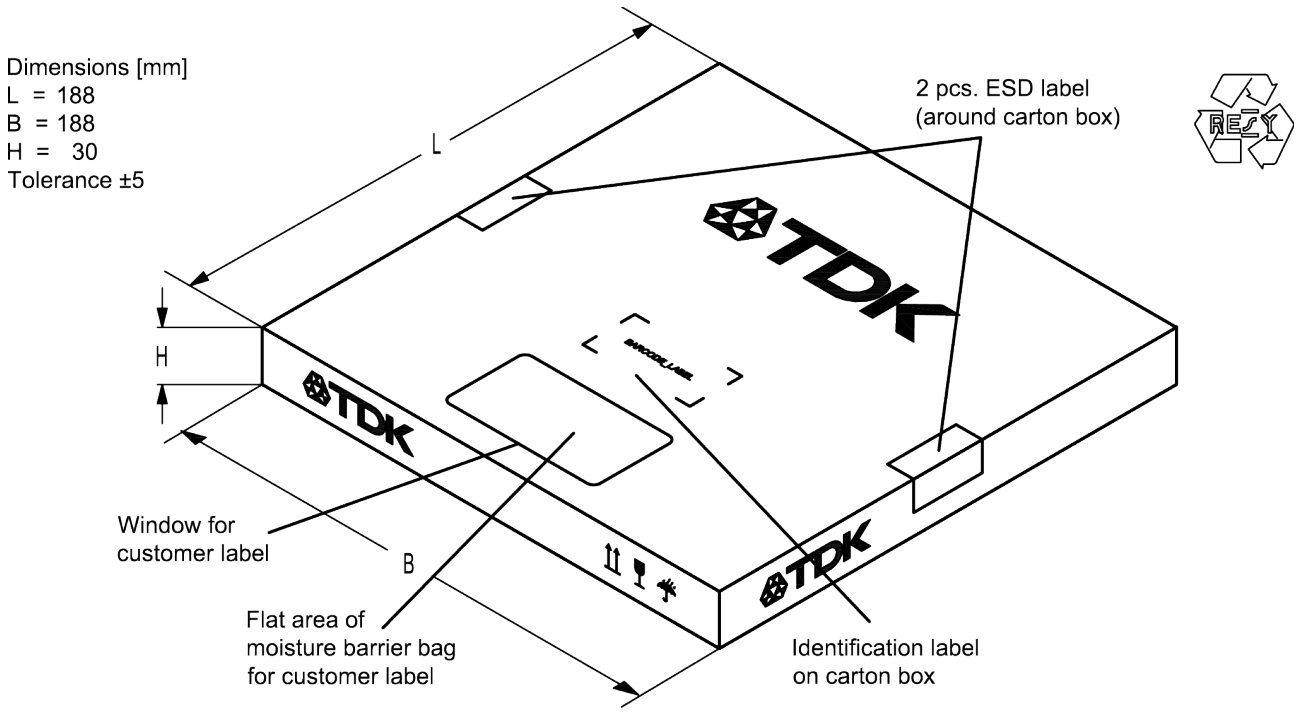

Figure 21: Drawing of folding box for reel with diameter of 180 mm.

15.3 Reel with diameter of 330 mm

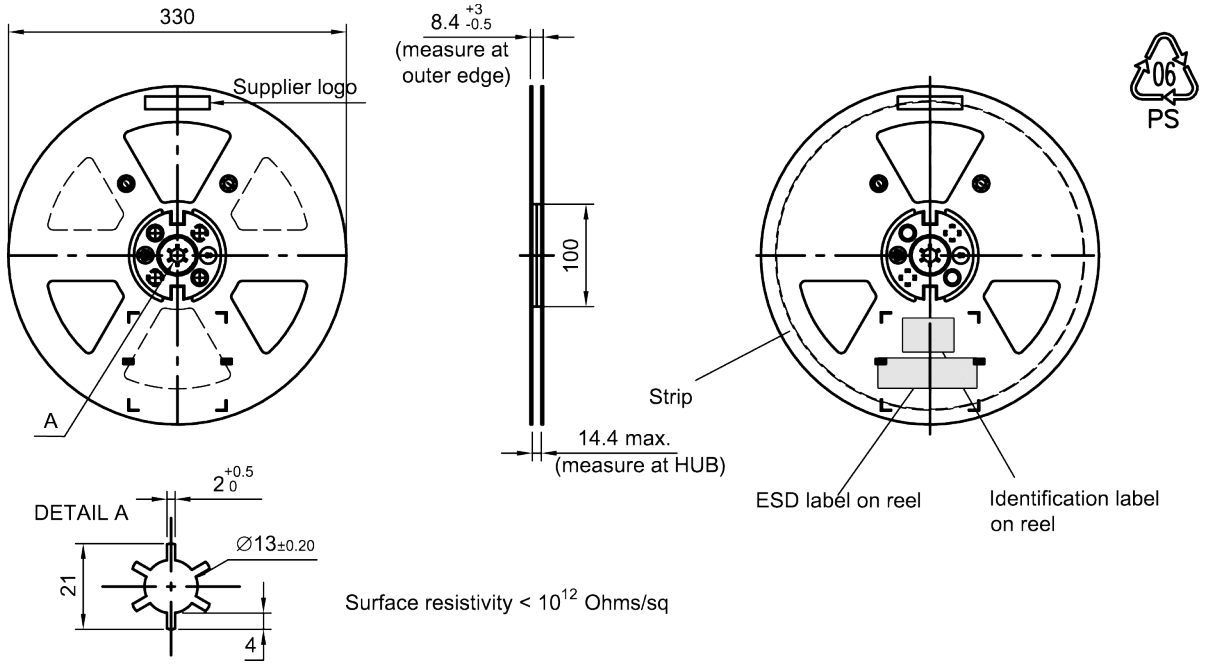

Figure 22: Drawing of reel (first-angle projection) with diameter of 330 mm.

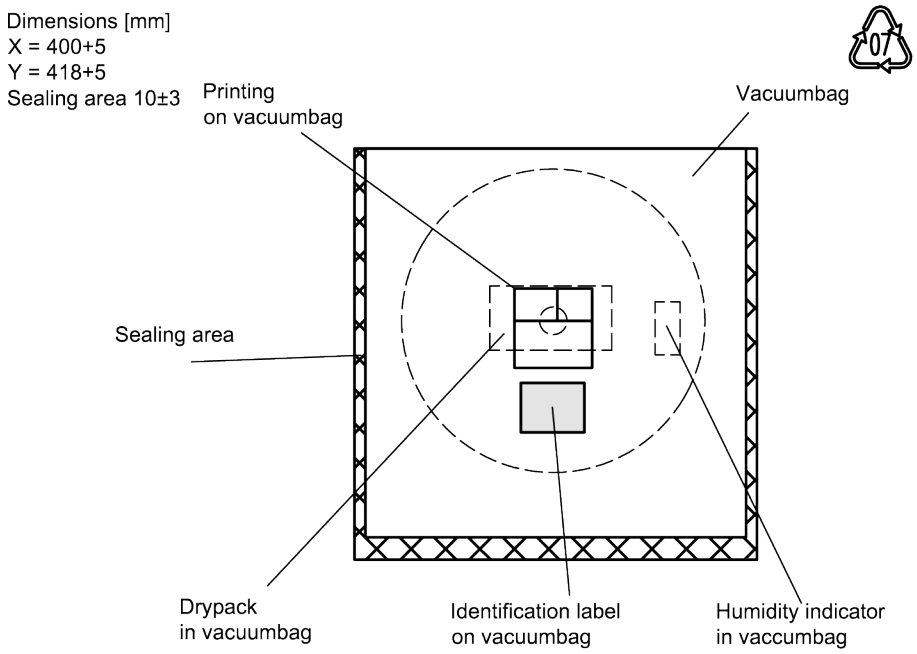

Figure 23: Drawing of moisture barrier bag (MBB) for reel with diameter of 330 mm.

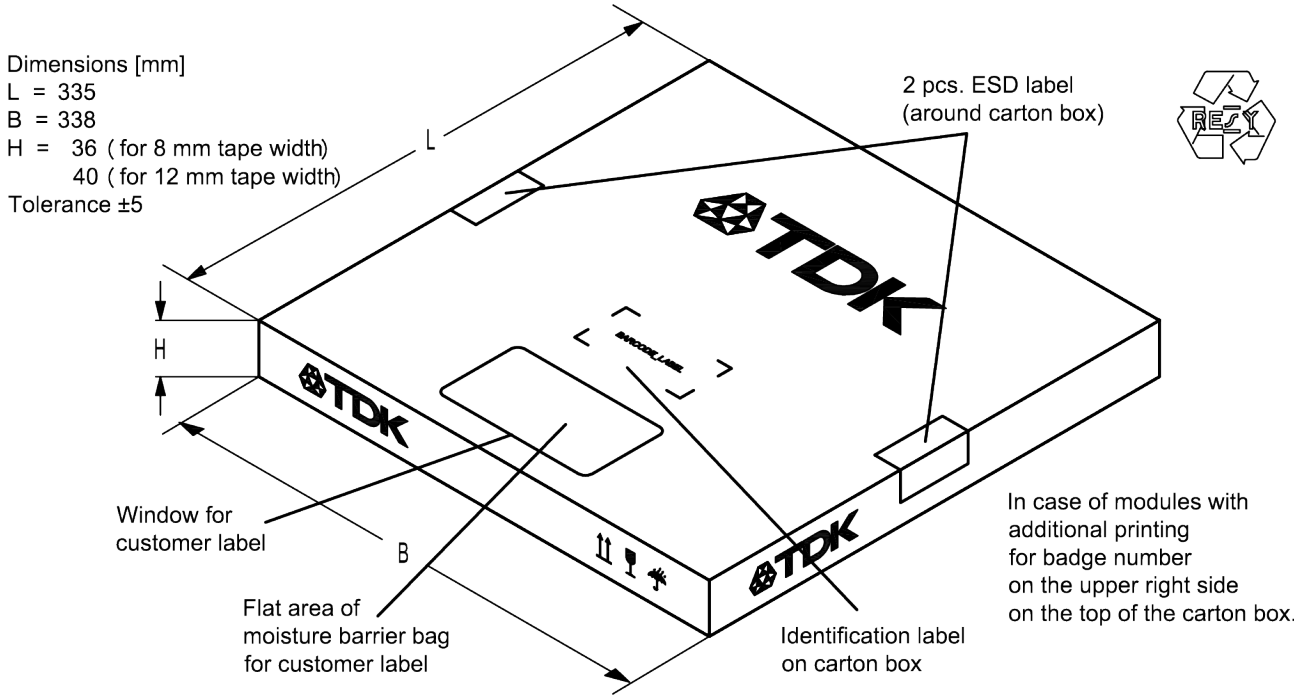

Figure 24: Drawing of folding box for reel with diameter of 330 mm.

16 Marking

Products are marked with product type number and lot number encoded according to Table 2:

- Type number:

  The 4 digit type number of the ordering code, e.g., B3xxxxB**1234**xxxx,
  is encoded by a special BASE32 code into a 3 digit marking.

  Example of decoding type number marking on device in decimal code.

16J	=>	**1234**
1 x 32^2 + **6** x 32^1 + **18 (=J)** x 32^0	=	**1234**

  The BASE32 code for product type B8967 is 8R7.

- Lot number:

  The last 5 digits of the lot number, e.g., **12345**,
  are encoded based on a special BASE47 code into a 3 digit marking.

  Example of decoding lot number marking on device in decimal code.

5UY	=>	**12345**
5 x 47^2 + **27 (=U)** x 47^1 + **31 (=Y)** x 47^0	=	**12345**

Adopted BASE32 code for type number			
Decimal value	Base32 code	Decimal value	Base32 code
0	0	16	G
1	1	17	H
2	2	18	J
3	3	19	K
4	4	20	M
5	5	21	N
6	6	22	P
7	7	23	Q
8	8	24	R
9	9	25	S
10	A	26	T
11	B	27	V
12	C	28	W
13	D	29	X
14	E	30	Y
15	F	31	Z

Adopted BASE47 code for lot number			
Decimal value	Base47 code	Decimal value	Base47 code
0	0	24	R
1	1	25	S
2	2	26	T
3	3	27	U
4	4	28	V
5	5	29	W
6	6	30	X
7	7	31	Y
8	8	32	Z
9	9	33	b
10	A	34	d
11	B	35	f
12	C	36	h
13	D	37	n
14	E	38	r
15	F	39	t
16	G	40	v
17	H	41	\
18	J	42	?
19	K	43	{
20	L	44	}
21	M	45	<
22	N	46	>
23	P		

Table 2: Lists for encoding and decoding of marking.

17 Soldering profile

The recommended soldering process is in accordance with IEC 60068-2-58 – 3rd edit and IPC/JEDEC J-STD-020B.

ramp rate	≤ 3 K/s
preheat	125 °C to 220 °C, 150 s to 210 s, 0.4 K/s to 1.0 K/s
T > 220 °C	30 s to 70 s
T > 230 °C	min. 10 s
T > 245 °C	max. 20 s
T ≥ 255 °C	–
peak temperature T_{peak}	250 °C +0/-5 °C
wetting temperature T_{min}	230 °C +5/-0 °C for 10 s ± 1 s
cooling rate	≤ 3 K/s
soldering temperature T	measured at solder pads

Table 3: Characteristics of recommended soldering profile for lead-free solder (Sn95.5Ag3.8Cu0.7).

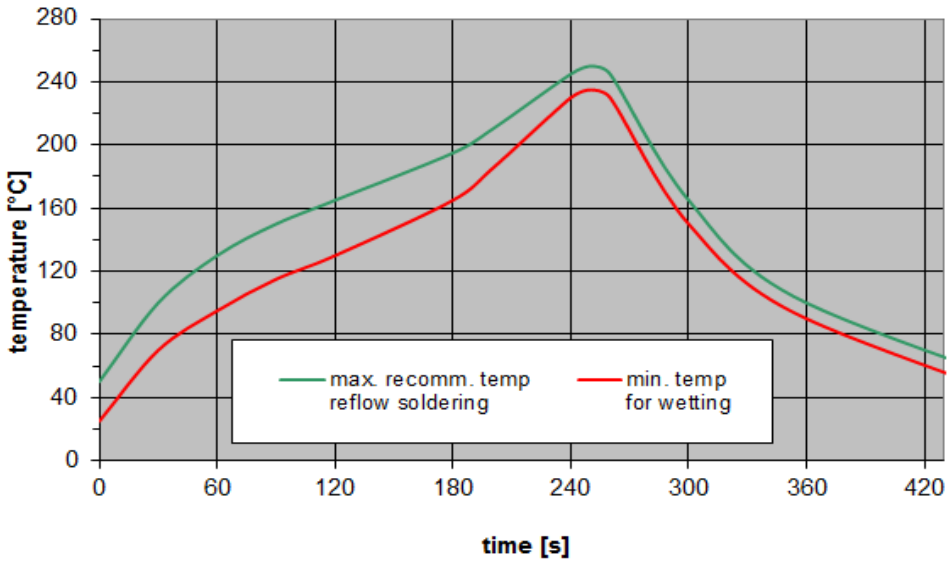

Figure 25: Recommended reflow profile for convection and infrared soldering – lead-free solder.

18 Annotations

18.1 Matching coils

See TDK inductor pdf-catalog http://www.tdk.co.jp/tefe02/coil.htm#aname1 and Data Library for circuit simulation http://www.tdk.co.jp/etvcl/index.htm.

18.2 RoHS compatibility

ROHS-compatible means that products are compatible with the requirements according to Art. 4 (substance restrictions) of Directive 2011/65/EU of the European Parliament and of the Council of June 8th, 2011, on the restriction of the use of certain hazardous substances in electrical and electronic equipment ("Directive") with due regard to the application of exemptions as per Annex III of the Directive in certain cases.

18.3 Scattering parameters (S-parameters)

The pin/port assignment is available in the headers of the S-parameter files. Please contact your local EPCOS sales office.

18.4 Ordering codes and packing units

Ordering code	Packing unit
B39212B8967P810	15000 pcs
B39212B8967P810S 5	5000 pcs

Table 4: Ordering codes and packing units.

19 Cautions and warnings

19.1 Display of ordering codes for EPCOS products

The ordering code for one and the same product can be represented differently in data sheets, data books, other publications and the website of EPCOS, or in order-related documents such as shipping notes, order confirmations and product labels. The varying representations of the ordering codes are due to different processes employed and do not affect the specifications of the respective products. Detailed information can be found on the Internet under **www.epcos.com/orderingcodes**.

19.2 Material information

Due to technical requirements components may contain dangerous substances. For information on the type in question please also contact one of our sales offices.

19.3 Moldability

Before using in overmolding environment, please contact your local EPCOS sales office.

19.4 Package information

Landing area

The printed circuit board (PCB) land pattern (landing area) shown is based on EPCOS internal development and empirical data and illustrated for example purposes, only. As customers' SMD assembly processes may have a plenty of variants and influence factors which are not under control or knowledge of EPCOS, additional careful process development on customer side is necessary and strongly recommended in order to achieve best soldering results tailored to the particular customer needs.

Dimensions

Unless otherwise specified all dimensions are understood using unit millimeter (mm).

Dimensions do not include burrs.

Projection method

Unless otherwise specified first-angle projection is applied.

Important notes

The following applies to all products named in this publication:

1. Some parts of this publication contain **statements about the suitability of our products for certain areas of application**. These statements are based on our knowledge of typical requirements that are often placed on our products in the areas of application concerned. We nevertheless expressly point out **that such statements cannot be regarded as binding statements about the suitability of our products for a particular customer application.** As a rule, EPCOS is either unfamiliar with individual customer applications or less familiar with them than the customers themselves. For these reasons, it is always ultimately incumbent on the customer to check and decide whether an EPCOS product with the properties described in the product specification is suitable for use in a particular customer application.
2. We also point out that **in individual cases, a malfunction of electronic components or failure before the end of their usual service life cannot be completely ruled out in the current state of the art, even if they are operated as specified.** In customer applications requiring a very high level of operational safety and especially in customer applications in which the malfunction or failure of an electronic component could endanger human life or health (e.g. in accident prevention or life-saving systems), it must therefore be ensured by means of suitable design of the customer application or other action taken by the customer (e.g. installation of protective circuitry or redundancy) that no injury or damage is sustained by third parties in the event of malfunction or failure of an electronic component.
3. **The warnings, cautions and product-specific notes must be observed.**
4. In order to satisfy certain technical requirements, **some of the products described in this publication may contain substances subject to restrictions in certain jurisdictions (e.g. because they are classed as hazardous)**. Useful information on this will be found in our Material Data Sheets on the Internet (www.epcos.com/material). Should you have any more detailed questions, please contact our sales offices.
5. We constantly strive to improve our products. Consequently, **the products described in this publication may change from time to time**. The same is true of the corresponding product specifications. Please check therefore to what extent product descriptions and specifications contained in this publication are still applicable before or when you place an order. We also **reserve the right to discontinue production and delivery of products**. Consequently, we cannot guarantee that all products named in this publication will always be available.
   The aforementioned does not apply in the case of individual agreements deviating from the foregoing for customer-specific products.
6. Unless otherwise agreed in individual contracts, **all orders are subject to the current version of the "General Terms of Delivery for Products and Services in the Electrical Industry" published by the German Electrical and Electronics Industry Association (ZVEI)**.
7. The trade names EPCOS, Alu-X, CeraDiode, CeraLink, CeraPad, CeraPlas, CSMP, CSSP, CTVS, DeltaCap, DigiSiMic, DSSP, ExoCore, FilterCap, FormFit, LeaXield, MiniBlue, MiniCell, MKD, MKK, MotorCap, PCC, PhaseCap, PhaseCube, PhaseMod, PhiCap, PQSine, SIFERRIT, SIFI, SIKOREL, SilverCap, SIMDAD, SiMic, SIMID, SineFormer, SIOV, SIP5D, SIP5K, TFAP, ThermoFuse, WindCap are **trademarks registered or pending** in Europe and in other countries. Further information will be found on the Internet at www.epcos.com/trademarks.