ROHS COMPLIANT

# PRODUCT DATA DRAWING

| REVISION HISTORY | | | |
|---|---|---|---|
| REV | DESCRIPTION | DATE | APPROVED |
| - | DCN 40120 | 10/13 | STW |
| | | | |
| | | | |

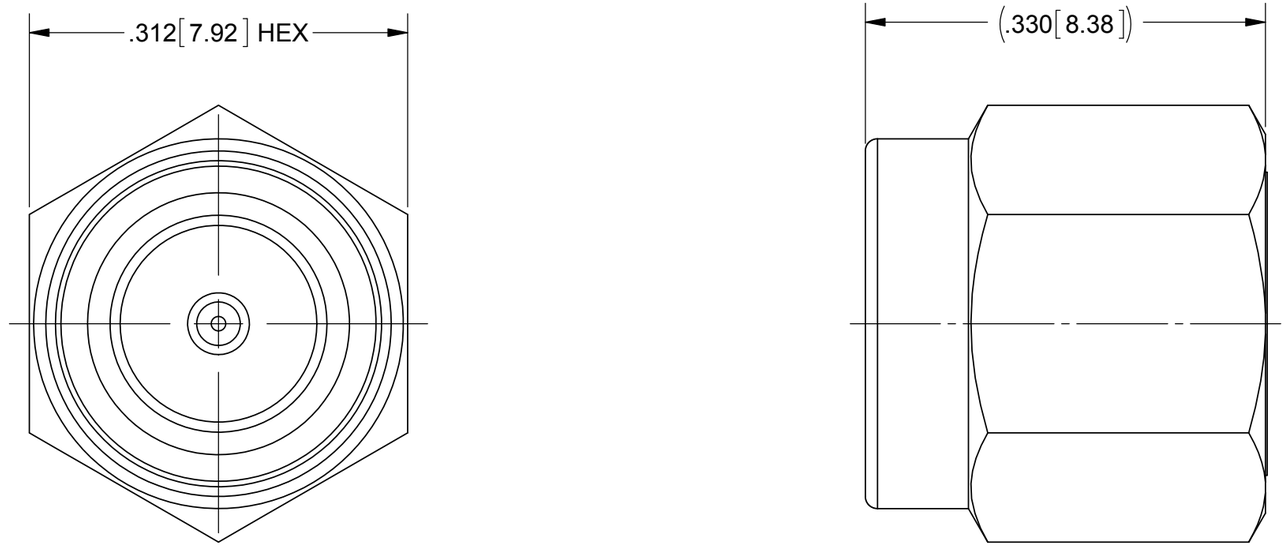


## MATERIAL:

| | |
|---|---|
| BODY & COUPLING NUT: | STAINLESS STEEL PER AMS-5640, ALLOY UNS S30300, TYPE 1 |
| LOCK RING & CONTACT: | BERYLLIUM COPPER PER ASTM B196, ALLOY No. UNS C17300, TD04 |
| INSULATOR: | PTFE PER ASTM D1710, TYPE I, GRADE 1, CLASS B |
| GASKET: | SILICONE RUBBER PER A-A-59588, CLASS 2B, GRADE 50/60 |
| ROD RESISTOR: | ALUMINA |

## FINISH:

| | |
|---|---|
| BODY, COUPLING NUT & CONTACT: | GOLD PER ASTM B488, TYPE II, CODE C, CLASS 1.27, OVER NICKEL PER AMS-QQ-N-290, CLASS 1, .00005" MIN. |

## PERFORMANCE:

| | |
|---|---|
| IMPEDANCE: | 50 OHMS |
| FREQ. RANGE: | DC TO 10.0 GHz |
| VSWR: | 1.10:1 DC TO 10.0 GHz |

MATERIAL: SEE NOTES

FINISH: SEE NOTES

SURFACE AREA: N/A

**PROPRIETARY**

THE INFORMATION CONTAINED IN THIS DRAWING IS THE SOLE PROPERTY OF SV MICROWAVE, INC. ANY REPRODUCTION IN PART OR AS A WHOLE WITHOUT THE WRITTEN PERMISSION OF SV MICROWAVE, INC IS PROHIBITED.

DIMENSIONS ARE IN INCHES TOLERANCES:

FRACTIONAL: ±1/64 ANGULAR: X° ±1°0' X°X' ±15'

DECIMAL: .X ±.030 .XX ±.010 .XXX ±.005

INTERPRET DIMENSIONS AND TOLERANCES PER ASME Y14.5M - 1994

THIRD ANGLE PROJECTION

UNLESS OTHERWISE SPECIFIED

1) ALL DIMENSIONS ARE IN INCHES [MILLIMETERS]
2) ALL DIMENSIONS ARE AFTER PLATING.
3) BREAK CORNERS & EDGES .005 R. MAX.
4) CHAM. 1ST & LAST THREADS.
5) SURFACE ROUGHNESS 63₈MIL-STD-10.
6) DIA.'S ON COMMON CENTERS TO BE CONCENTRIC WITHIN .005 T.I.R.
7) REMOVE ALL BURRS

| | |
|---|---|
| DRAWN: | FSG 10/09/13 |
| CHECKED: | STW 10/09/13 |
| APPROVED: | STW 10/09/13 |

***SV Microwave, Inc.***
2400 Centrepark West Drive, Suite 100
West Palm Beach, FL 33409

TITLE: SMA PLUG TERMINIATION 1 WATT

| SIZE | CAGE CODE | DWG. NO. |
|---|---|---|
| B | 95077 | M39030/3-09 |

SCALE: 8:1 SHEET 1 OF 1