CONTROL DRAWING

29746-1

L

DOCUMENT PACKAGE

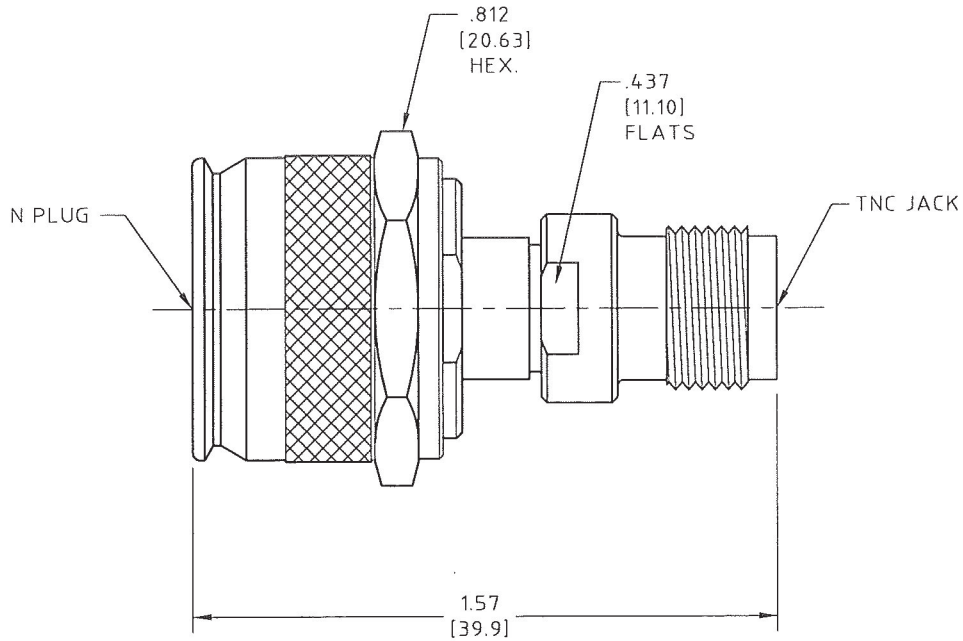

NOTES:

1. DESCRIPTION,
   ADAPTOR, N PLUG TO TNC JACK.

2. MATERIALS AND FINISHES
   - BODY AND NUT
     - STEEL, CORROSION RESISTANT PER ASTM A-582,
       UNS No. S30300, COND. A, NON MAGNETIC,
     - PASSIVATED PER SAE-AMS-2700.
       NO DICHROMATE SOLUTIONS USED.
   - CENTER CONDUCTOR
     - BERYLLIUM COPPER ALLOY PER ASTM B-196,
       UNS No. C17300, TEMPER TD04(H),
     - GOLD PLATED 50 µIN (1.27 µM) MIN. THK.
       PER ASTM B-488, CODE C, TYPE II, CLASS 1.27
     - OVER
     - NICKEL PLATE, 50 µIN (1.27 µM) MIN. THK.
       PER SAE-AMS-QQ-N-290, CLASS 1.
   - DIELECTRIC
     - POLYTETRAFLUOROETHYLENE (PTFE) PER ASTM D-1710,
       OR ASTM D-4894, TYPE I, GRADE 1, CLASS A. AND
     - POLYPHENYLENE OXIDE (PPO) BASE RESIN, (G.E. NORYL).
   - RETAINING RING
     - BERYLLIUM COPPER, PER ASTM B-197 OR B-441,
       UNS No. C17200 TEMPER TD04(H)
   - GASKET
     - SILICONE RUBBER PER GSA CID A-A-59588-2B AND SAE-AMS-3304

3. ELECTRICAL CHARACTERISTICS:
   - IMPEDANCE
     50.0 Ohms NOMINAL.
   - FREQUENCY
     18.0 GHz MAX.
   - INSERTION LOSS
     0.35 dB MAX.
   - VSWR
     1.25 : 1 MAX.

4. INTERFACES MEET MIL-STD-348.

5. OPERATING TEMPERATURE RANGE
   -55° C TO +95° C

RoHS 6 COMPLIANT

REV.	DESCRIPTION	DATE	BY	APPROVED
L	"RoHS" ADDED	11/11/16	EF	

UNLESS OTHERWISE SPECIFIED CONCENTRICITY .004 T.I.R. CORNERS AND FILLETS .005 MAX. RADIUS OR CHAMFER. SURFACE FINISH 63 RMS MICROINCHES OR BETTER.

FRACTIONS	± 1/16
X	± .030
XX	± .015
XXX	± .005
ANGLES	± 1°

DO NOT SCALE DRAWING

	NAME	DATE
PREP.	M. KEATING	02/23/91
ELEC.		
MECH.		
Q.C.		

HUBER+SUHNER Astrolab

THIS DRAWING CONTAINS PATENTABLE AND PROPRIETARY INFORMATION. THE DESIGN CANNOT BE USED WITHOUT WRITTEN PERMISSION OF HUBER + SUHNER ASTROLAB.

TITLE: ADAPTOR, N PLUG TO TNC JACK.

THDS. TO BE IN ACCORD WITH U.S. DEPT. OF COMM. SCREW THD. STDS. FOR FEDERAL SERVICES 1950 SUPL. TO HANDBOOK H 28.

SCALE	CODE IDENT.	DWG NO.	REV
2:1	16301	29746-1	L