REVISIONS			
LTR	DESCRIPTION	DATE (YR-MO-DA)	APPROVED
A	Make change to input offset current test as specified in table I. - ro	99-10-25	R. MONNIN
B	Make change to 1.5 and add a footnote to TABLE I and TABLE IIB. - ro	00-11-16	R. MONNIN
C	Add condition "V_{OUT} = ±10 V" to the irradiation section of the $\pm A_{VS}$ test and add "V_{CM} = 0 V" to footnote 1/ as specified under table I. Make correction to table IIA. - ro	03-03-07	R. MONNIN

REV																				
SHEET																				
REV																				
SHEET																				
REV STATUS				REV			C	C	C	C	C	C	C	C	C	C	C	C		
OF SHEETS				SHEET			1	2	3	4	5	6	7	8	9	10	11	12		

PMIC N/A

PREPARED BY
RICK OFFICER

STANDARD MICROCIRCUIT DRAWING

THIS DRAWING IS AVAILABLE FOR USE BY ALL DEPARTMENTS AND AGENCIES OF THE DEPARTMENT OF DEFENSE

AMSC N/A

CHECKED BY
RAJESH PITHADIA

APPROVED BY
RAYMOND MONNIN

DRAWING APPROVAL DATE
98-10-08

REVISION LEVEL
C

DEFENSE SUPPLY CENTER COLUMBUS
COLUMBUS, OHIO 43216
http://www.dscc.dla.mil

MICROCIRCUIT, LINEAR, RADIATION HARDENED JFET-INPUT OPERATIONAL AMPLIFIER, MONOLITHIC SILICON

SIZE	CAGE CODE	
A	**67268**	**5962-98636**

SHEET 1 OF 12

DISTRIBUTION STATEMENT A. Approved for public release; distribution is unlimited.

1. SCOPE

1.1 Scope. This drawing documents two product assurance class levels consisting of high reliability (device classes Q and M) and space application (device class V). A choice of case outlines and lead finishes are available and are reflected in the Part or Identifying Number (PIN). When available, a choice of Radiation Hardness Assurance (RHA) levels are reflected in the PIN.

1.2 PIN. The PIN is as shown in the following example:

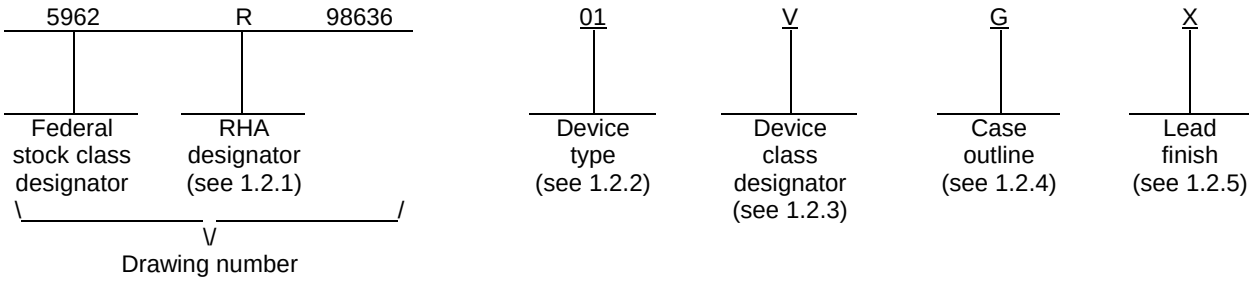

1.2.1 RHA designator. Device classes Q and V RHA marked devices meet the MIL-PRF-38535 specified RHA levels and are marked with the appropriate RHA designator. Device class M RHA marked devices meet the MIL-PRF-38535, appendix A specified RHA levels and are marked with the appropriate RHA designator. A dash (-) indicates a non-RHA device.

1.2.2 Device type(s). The device type(s) identify the circuit function as follows:

Device type	Generic number	Circuit function
01	PM155A	Radiation hardened JFET input operational amplifier
02	PM156A	Radiation hardened JFET input operational amplifier

1.2.3 Device class designator. The device class designator is a single letter identifying the product assurance level as follows:

Device class	Device requirements documentation
M	Vendor self-certification to the requirements for MIL-STD-883 compliant, non-JAN class level B microcircuits in accordance with MIL-PRF-38535, appendix A
Q or V	Certification and qualification to MIL-PRF-38535

1.2.4 Case outline(s). The case outline(s) are as designated in MIL-STD-1835 and as follows:

Outline letter	Descriptive designator	Terminals	Package style
G	MACY1-X8	8	Can
P	GDIP1-T8 or CDIP2-T8	8	Dual-in-line

1.2.5 Lead finish. The lead finish is as specified in MIL-PRF-38535 for device classes Q and V or MIL-PRF-38535, appendix A for device class M.

1.3 Absolute maximum ratings. 1/

Supply voltage range ($\pm V_S$) ..... ±22 V
Input voltage range (V_{IN}) ..... ±20 V 2/
Differential input voltage range ..... ±40 V
Power dissipation (P_D) ..... 670 mW
Output short circuit duration ..... Unlimited 3/
Junction temperature (T_J) ..... 175°C 4/
Storage temperature range ..... -65°C to +150°C
Lead temperature (soldering, 60 seconds) ..... 300°C
Thermal resistance, junction-to-case (θ_{JC}) ..... See MIL-STD-1835
Thermal resistance, junction-to-ambient (θ_{JA}):
Case G ..... 150°C/W
Case P ..... 120°C/W

1.4 Recommended operating conditions.

Supply voltage range ($\pm V_S$) ..... ±5 V dc to 20 V dc
Ambient temperature range (T_A) ..... -55°C to +125°C

1.5 Radiation features.

Maximum total dose available (dose rate = 50 – 300 rads(Si)/s) ..... 100 Krads 5/

2. APPLICABLE DOCUMENTS

2.1 Government specification, standards, and handbooks. The following specification, standards, and handbooks form a part of this drawing to the extent specified herein. Unless otherwise specified, the issues of these documents are those listed in the issue of the Department of Defense Index of Specifications and Standards (DoDISS) and supplement thereto, cited in the solicitation.

SPECIFICATION

DEPARTMENT OF DEFENSE

MIL-PRF-38535 - Integrated Circuits, Manufacturing, General Specification for.

STANDARDS

DEPARTMENT OF DEFENSE

MIL-STD-883 - Test Method Standard Microcircuits.
MIL-STD-1835 - Interface Standard Electronic Component Case Outlines.

_____
1/ Stresses above the absolute maximum rating may cause permanent damage to the device. Extended operation at the maximum levels may degrade performance and affect reliability.
2/ The absolute maximum negative input voltage is equal to the negative power supply voltage.
3/ Short circuit may be to ground or either supply. Rating applies to +125°C case temperature or +75°C ambient temperature.
4/ For short term test (in the specific burn-in and life test configuration when required and up to 168°C hours maximum), T_J = 275°C.
5/ These parts may be dose rate sensitive in a space environment and may demonstrate enhanced low dose rate effects. Radiation end point limits for the noted parameters are guaranteed only for the conditions specified in MIL-STD-883, method 1019, condition A.

HANDBOOKS

DEPARTMENT OF DEFENSE

MIL-HDBK-103 - List of Standard Microcircuit Drawings.
MIL-HDBK-780 - Standard Microcircuit Drawings.

(Unless otherwise indicated, copies of the specification, standards, and handbooks are available from the Standardization Document Order Desk, 700 Robbins Avenue, Building 4D, Philadelphia, PA 19111-5094.)

2.2 Order of precedence. In the event of a conflict between the text of this drawing and the references cited herein, the text of this drawing takes precedence. Nothing in this document, however, supersedes applicable laws and regulations unless a specific exemption has been obtained.

3. REQUIREMENTS

3.1 Item requirements. The individual item requirements for device classes Q and V shall be in accordance with MIL-PRF-38535 and as specified herein or as modified in the device manufacturer's Quality Management (QM) plan. The modification in the QM plan shall not affect the form, fit, or function as described herein. The individual item requirements for device class M shall be in accordance with MIL-PRF-38535, appendix A for non-JAN class level B devices and as specified herein.

3.2 Design, construction, and physical dimensions. The design, construction, and physical dimensions shall be as specified in MIL-PRF-38535 and herein for device classes Q and V or MIL-PRF-38535, appendix A and herein for device class M.

3.2.1 Case outlines. The case outlines shall be in accordance with 1.2.4 herein.

3.2.2 Terminal connections. The terminal connections shall be as specified on figure 1.

3.2.3 Radiation exposure circuit. The radiation exposure circuit shall be as specified on figure 2.

3.3 Electrical performance characteristics and post irradiation parameter limits. Unless otherwise specified herein, the electrical performance characteristics and post irradiation parameter limits are as specified in table I and shall apply over the full ambient operating temperature range.

3.4 Electrical test requirements. The electrical test requirements shall be the subgroups specified in table IIA. The electrical tests for each subgroup are defined in table I.

3.5 Marking. The part shall be marked with the PIN listed in 1.2 herein. In addition, the manufacturer's PIN may also be marked as listed in MIL-HDBK-103. For packages where marking of the entire SMD PIN number is not feasible due to space limitations, the manufacturer has the option of not marking the "5962-" on the device. For RHA product using this option, the RHA designator shall still be marked. Marking for device classes Q and V shall be in accordance with MIL-PRF-38535. Marking for device class M shall be in accordance with MIL-PRF-38535, appendix A.

3.5.1 Certification/compliance mark. The certification mark for device classes Q and V shall be a "QML" or "Q" as required in MIL-PRF-38535. The compliance mark for device class M shall be a "C" as required in MIL-PRF-38535, appendix A.

3.6 Certificate of compliance. For device classes Q and V, a certificate of compliance shall be required from a QML-38535 listed manufacturer in order to supply to the requirements of this drawing (see 6.6.1 herein). For device class M, a certificate of compliance shall be required from a manufacturer in order to be listed as an approved source of supply in MIL-HDBK-103 (see 6.6.2 herein). The certificate of compliance submitted to DSCC-VA prior to listing as an approved source of supply for this drawing shall affirm that the manufacturer's product meets, for device classes Q and V, the requirements of MIL-PRF-38535 and herein or for device class M, the requirements of MIL-PRF-38535, appendix A and herein.

3.7 Certificate of conformance. A certificate of conformance as required for device classes Q and V in MIL-PRF-38535 or for device class M in MIL-PRF-38535, appendix A shall be provided with each lot of microcircuits delivered to this drawing.

3.8 Notification of change for device class M. For device class M, notification to DSCC-VA of change of product (see 6.2 herein) involving devices acquired to this drawing is required for any change as defined in MIL-PRF-38535, appendix A.

TABLE I. Electrical performance characteristics.

Test	Symbol	Conditions $-55°C \le T_A \le +125°C$ unless otherwise specified	Group A subgroups	Device type	Limits Min	Limits Max	Unit
Input offset voltage	V_{IO}	$\pm V_S = \pm 5$ V, $V_{CM} = 0$ V	1	All	-2	2	mV
		$\pm V_S = \pm 20$ V, $V_{CM} = \pm 15$ V, 0 V	2,3		-2.5	2.5	
		M,D,P,L,R 1/ 2/	1		-2	2	
Input offset voltage 3/ temperature sensitivity	$\Delta V_{IO} / \Delta T$	$\pm V_S = \pm 20$ V, $V_{CM} = 0$ V	1,2,3	All	-10	10	µV/°C
Input offset current 4/ 5/ 6/	I_{IO}	$\pm V_S = \pm 20$ V, $V_{CM} = 0$ V	1	All	-20	20	pA
			2,3		-20	20	nA
		M,D,P,L,R 1/ 2/	1		-0.3	0.3	
Input bias current 4/ 5/ 6/	$+I_{IB}$, $-I_{IB}$	$\pm V_S = \pm 20$ V, $V_{CM} = +15$ V, $t \le 25$ ms	1	All	-100	3500	pA
			2		-10	60	nA
		M,D,P,L,R 1/ 2/	1		-3.0	3.0	nA
		$\pm V_S = \pm 15$ V, $V_{CM} = +10$ V, $t \le 25$ ms	1		-100	300	pA
			2		-10	60	nA
		$\pm V_S = \pm 20$ V, -15 V $< V_{CM} < 0$ V, $t \le 25$ ms	1		-100	100	pA
			2		-10	50	nA
Adjustment for input offset voltage 3/	$+V_{IO}$ ADJ, $-V_{IO}$ ADJ	$\pm V_S = \pm 20$ V	1,2,3	All	+8	-8	mV
Output voltage swing 3/ (maximum)	V_{OP}	$\pm V_S = \pm 20$ V, $R_L = 10$ kΩ	1,2,3	All	±16		V
		$\pm V_S = \pm 20$ V, $R_L = 2$ kΩ			±15		
Output short circuit current 3/ 7/	$+I_{OS}$	$\pm V_S = \pm 15$ V, $t \le 25$ ms, short circuit to ground	1,2,3	All	-50		mA
	$-I_{OS}$					50	

See footnotes at end of table.

TABLE I. Electrical performance characteristics - Continued.

Test	Symbol	Conditions $-55°C \le T_A \le +125°C$ unless otherwise specified	Group A subgroups	Device type	Limits		Unit
					Min	Max	
Supply current	I_S	$\pm V_S = \pm 15$ V	1,2	01		4	mA
				02		7	
			3	01		6	
				02		11	
		M,D,P,L,R 1/ 2/	1	01		4	
				02		7	
Open loop voltage 8/ gain (single ended)	$\pm A_{VS}$	$\pm V_S = \pm 20$ V, $R_L = 2$ kΩ	4	All	50		V/mV
		$V_{OUT} = \pm 15$ V	5,6		25		
		M,D,P,L,R 1/ 2/ $V_{OUT} = \pm 10$ V	4		50		
Open loop voltage 3/ 8/ gain (single ended)	A_{VS}	$V_S = \pm 5$ V, $R_L = 2$ kΩ, $V_{OUT} = \pm 2$ V	4,5,6	All	10		V/mV
Noise (referred to input) 3/ broadband	N_I(BB)	$\pm V_S = 20$V, bandwidth = 5 kHz	4	All		10	µVrms
Noise (referred to input) 3/ popcorn	N_I(PC)	$\pm V_S = 20$ V, bandwidth = 5 kHz	4	All		40	μV_{PK}
Slew rate 3/	±SR	$\pm V_S = \pm 15$ V, $V_{IN} = \pm 5$ V, $A_V = 1$	4	01	3		V/µs
				02	10		
			5,6	01	1.5		
				02	7		
Power supply rejection 3/ ratio	+PSRR	$+V_S = 10$ V, $-V_S = -20$ V	4,5,6	All	85		dB
	-PSRR	$+V_S = 20$ V, $-V_S = -10$ V			85		
Input voltage common 3/ 9/ mode rejection	CMR	$\pm V_S = \pm 20$ V, $V_{IN} = \pm 15$ V	4,5,6	All	85		dB

See footnotes at end of table.

TABLE I. Electrical performance characteristics - Continued.

Test	Symbol	Conditions $-55°C \le T_A \le +125°C$ unless otherwise specified	Group A subgroups	Device type	Limits		Unit
					Min	Max	
Transient response rise time 3/	TR(tr)	$\pm V_S = \pm 15$ V, $R_L = 2$ kΩ, $C_L = 100$ pF, $V_{IN} = 50$ mV, $A_V = 1$	9,10,11	01		150	ns
				02		100	
Transient response overshoot 3/	TR(os)	$\pm V_S = \pm 15$ V, $R_L = 2$ kΩ, $C_L = 100$ pF, $V_{IN} = 50$ mV, $A_V = 1$	9,10,11	01,02		40	%
Settling time 3/	$+t_s$, $-t_s$	$\pm V_S = \pm 15$ V, 0.1 % error, $A_V = -1$	9	All		1500	ns

1/ Devices supplied to this drawing have been characterized through all levels M, D, P, L, and R of irradiation. However, this device is only tested at the "R" level. Pre and Post irradiation values are identical unless otherwise specified in table I. When performing post irradiation electrical measurements for any RHA level, $T_A = +25°C$.

$\pm V_S = \pm 15$ V and $V_{CM} = 0$ V.

2/ These parts may be dose rate sensitive in a space environment and may demonstrate enhanced low dose rate effects. Radiation end point limits for the noted parameters are guaranteed only for the conditions specified in MIL-STD-883, method 1019, condition A.

3/ This parameter is not tested to post irradiation.

4/ Bias and offset currents are actually junction leakage currents which double (approximately) for each 10°C increase in junction temperature (T_J). Measurement of bias and offset current is specified at T_J rather than T_A, since normal warmup thermal transients will affect the bias and offset currents. The measurements for bias currents must be made within 25 ms or 5 loop time constants which ever is greater, after power is first applied to the device for test. Measurement at $T_A = -55°C$ is not necessary since expected values are too small for typical test systems.

5/ Bias current is sensitive to power supply voltage, common mode voltage and temperature.

6/ Negative I_{IB} minimum limits reflect the characteristics of devices with bias current compensation.

7/ Continuous limits shall be considerably lower. Protection for shorts to either supply exists providing that T_J(maximum) ≤ 175°C.

8/ Because of thermal feedback effects from output to input, open loop gain is not guaranteed to be linear or positive over the operating range. These requirements, if needed, should be specified by the user in additional procurement documents.

9/ CMR is calculated from V_{IO} measurements at $V_{CM} = +15$ V and -15 V.

3.9 Verification and review for device class M. For device class M, DSCC, DSCC's agent, and the acquiring activity retain the option to review the manufacturer's facility and applicable required documentation. Offshore documentation shall be made available onshore at the option of the reviewer.

3.10 Microcircuit group assignment for device class M. Device class M devices covered by this drawing shall be in microcircuit group number 61 (see MIL-PRF-38535, appendix A).

Device types	All
Case outlines	G and P
Terminal number	Terminal symbol
1	BALANCE
2	-INPUT
3	+INPUT
4	$-V_S$
5	BALANCE
6	OUTPUT
7	$+V_S$
8	NC

NC = No connection

FIGURE 1. Terminal connections.

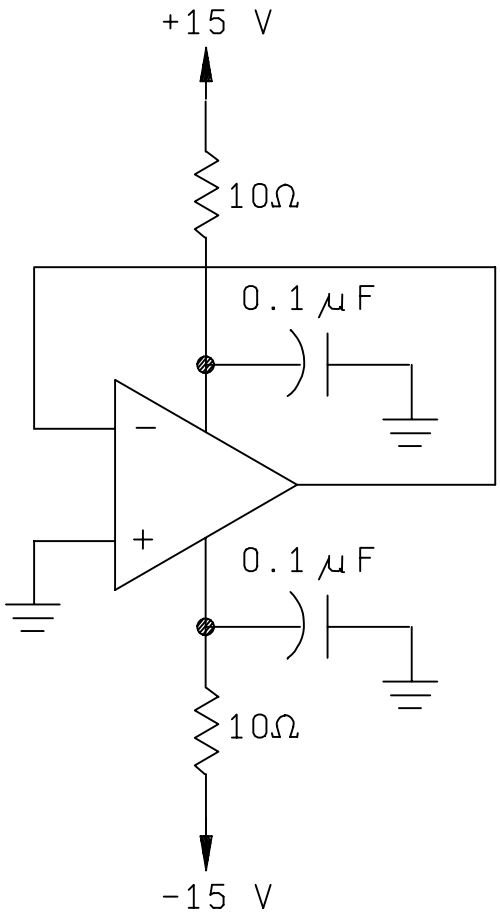

FIGURE 2. Radiation exposure circuit.

4. QUALITY ASSURANCE PROVISIONS

4.1 Sampling and inspection. For device classes Q and V, sampling and inspection procedures shall be in accordance with MIL-PRF-38535 or as modified in the device manufacturer's Quality Management (QM) plan. The modification in the QM plan shall not affect the form, fit, or function as described herein. For device class M, sampling and inspection procedures shall be in accordance with MIL-PRF-38535, appendix A.

4.2 Screening. For device classes Q and V, screening shall be in accordance with MIL-PRF-38535, and shall be conducted on all devices prior to qualification and technology conformance inspection. For device class M, screening shall be in accordance with method 5004 of MIL-STD-883, and shall be conducted on all devices prior to quality conformance inspection.

4.2.1 Additional criteria for device class M.

a. Burn-in test, method 1015 of MIL-STD-883.

(1) Test condition A, B, C, or D. The test circuit shall be maintained by the manufacturer under document revision level control and shall be made available to the preparing or acquiring activity upon request. The test circuit shall specify the inputs, outputs, biases, and power dissipation, as applicable, in accordance with the intent specified in test method 1015.

(2) T_A = +125°C, minimum.

b. Interim and final electrical test parameters shall be as specified in table IIA herein.

4.2.2 Additional criteria for device classes Q and V.

a. The burn-in test duration, test condition and test temperature, or approved alternatives shall be as specified in the device manufacturer's QM plan in accordance with MIL-PRF-38535. The burn-in test circuit shall be maintained under document revision level control of the device manufacturer's Technology Review Board (TRB) in accordance with MIL-PRF-38535 and shall be made available to the acquiring or preparing activity upon request. The test circuit shall specify the inputs, outputs, biases, and power dissipation, as applicable, in accordance with the intent specified in test method 1015 of MIL-STD-883.

b. Interim and final electrical test parameters shall be as specified in table IIA herein.

c. Additional screening for device class V beyond the requirements of device class Q shall be as specified in MIL-PRF-38535, appendix B.

4.3 Qualification inspection for device classes Q and V. Qualification inspection for device classes Q and V shall be in accordance with MIL-PRF-38535. Inspections to be performed shall be those specified in MIL-PRF-38535 and herein for groups A, B, C, D, and E inspections (see 4.4.1 through 4.4.4).

4.4 Conformance inspection. Technology conformance inspection for classes Q and V shall be in accordance with MIL-PRF-38535 including groups A, B, C, D, and E inspections and as specified herein. Quality conformance inspection for device class M shall be in accordance with MIL-PRF-38535, appendix A and as specified herein. Inspections to be performed for device class M shall be those specified in method 5005 of MIL-STD-883 and herein for groups A, B, C, D, and E inspections (see 4.4.1 through 4.4.4).

4.4.1 Group A inspection.

a. Tests shall be as specified in table IIA herein.

b. Subgroups 7 and 8 in table I, method 5005 of MIL-STD-883 shall be omitted.

TABLE IIA. Electrical test requirements.

Test requirements	Subgroups (in accordance with MIL-STD-883, method 5005, table I)	Subgroups (in accordance with MIL-PRF-38535, table III)	
	Device class M	Device class Q	Device class V
Interim electrical parameters (see 4.2)	1	1	1
Final electrical parameters (see 4.2)	1,2,3,4, 1/ 5,6	1,2,3,4, 1/ 5,6	1,2,3,4, 1/ 2/ 5,6
Group A test requirements (see 4.4)	1,2,3,4,5,6, 9,10,11	1,2,3,4,5,6, 9,10,11	1,2,3,4,5,6, 9,10,11
Group C end-point electrical parameters (see 4.4)	1	1	1,2,3 2/
Group D end-point electrical parameters (see 4.4)	1	1	1,2,3
Group E end-point electrical parameters (see 4.4)	---	---	1,4

1/ PDA applies to subgroup 1.
2/ See table IIB for delta measurement parameters.

TABLE IIB. 240 hour burn-in and group C end point electrical parameters.

Parameter 1/	Device type	Limits		Delta		Units
		Min	Max	Min	Max	
V_{IO}	All	-2	2	-0.5	+0.5	mV
$+I_{IB}$	All	-100	100	-50	+50	pA
$-I_{IB}$	All	-100	100	-50	+50	pA

1/ T_A = +25°C, $\pm V_S$ = ±20 V, and V_{CM} = 0 V for all device types.

4.4.2 Group C inspection. The group C inspection end-point electrical parameters shall be as specified in table IIA herein.

4.4.2.1 Additional criteria for device class M. Steady-state life test conditions, method 1005 of MIL-STD-883:

a. Test condition A, B, C, or D. The test circuit shall be maintained by the manufacturer under document revision level control and shall be made available to the preparing or acquiring activity upon request. The test circuit shall specify the inputs, outputs, biases, and power dissipation, as applicable, in accordance with the intent specified in test method 1005 of MIL-STD-883.

b. T_A = +125°C, minimum.

c. Test duration: 1,000 hours, except as permitted by method 1005 of MIL-STD-883.

4.4.2.2 Additional criteria for device classes Q and V. The steady-state life test duration, test condition and test temperature, or approved alternatives shall be as specified in the device manufacturer's QM plan in accordance with MIL-PRF-38535. The test circuit shall be maintained under document revision level control by the device manufacturer's TRB in accordance with MIL-PRF-38535 and shall be made available to the acquiring or preparing activity upon request. The test circuit shall specify the inputs, outputs, biases, and power dissipation, as applicable, in accordance with the intent specified in test method 1005 of MIL-STD-883.

4.4.3 Group D inspection. The group D inspection end-point electrical parameters shall be as specified in table IIA herein.

4.4.4 Group E inspection. Group E inspection is required only for parts intended to be marked as radiation hardness assured (see 3.5 herein). RHA levels for device classes M, Q, and V shall be as specified in MIL-I-38535. End-point electrical parameters shall be as specified in table IIA herein.

4.4.4.1 Total dose irradiation testing. Total dose irradiation testing shall be performed in accordance with MIL-STD-883 method 1019, condition A and as specified herein.

4.4.4.1.1 Accelerated aging test. Accelerated aging tests shall be performed on all devices requiring a RHA level greater than 5k rads(Si). The post-anneal end-point electrical parameter limits shall be as specified in table I herein and shall be the pre-irradiation end-point electrical parameter limit at 25°C ±5°C. Testing shall be performed at initial qualification and after any design or process changes which may affect the RHA response of the device.

4.4.4.2 Dose rate burnout. When required by the customer test shall be performed on devices, SEC, or approved test structures at technology qualifications and after any design or process changes which may effect the RHA capability of the process. Dose rate burnout shall be performed in accordance with test method 1023 of MIL-STD-883 and as specified herein.

5. PACKAGING

5.1 Packaging requirements. The requirements for packaging shall be in accordance with MIL-PRF-38535 for device classes Q and V or MIL-PRF-38535, appendix A for device class M.

6. NOTES

6.1 Intended use. Microcircuits conforming to this drawing are intended for use for Government microcircuit applications (original equipment), design applications, and logistics purposes.

6.1.1 Replaceability. Microcircuits covered by this drawing will replace the same generic device covered by a contractor prepared specification or drawing.

6.1.2 Substitutability. Device class Q devices will replace device class M devices.

6.2 Configuration control of SMD's. All proposed changes to existing SMD's will be coordinated with the users of record for the individual documents. This coordination will be accomplished using DD Form 1692, Engineering Change Proposal.

6.3 Record of users. Military and industrial users should inform Defense Supply Center Columbus when a system application requires configuration control and which SMD's are applicable to that system. DSCC will maintain a record of users and this list will be used for coordination and distribution of changes to the drawings. Users of drawings covering microelectronic devices (FSC 5962) should contact DSCC-VA, telephone (614) 692-0544.

6.4 Comments. Comments on this drawing should be directed to DSCC-VA , Columbus, Ohio 43216-5000, or telephone (614) 692-0547.

6.5 Abbreviations, symbols, and definitions. The abbreviations, symbols, and definitions used herein are defined in MIL-PRF-38535 and MIL-HDBK-1331.

6.6 Sources of supply.

6.6.1 Sources of supply for device classes Q and V. Sources of supply for device classes Q and V are listed in QML-38535. The vendors listed in QML-38535 have submitted a certificate of compliance (see 3.6 herein) to DSCC-VA and have agreed to this drawing.

6.6.2 Approved sources of supply for device class M. Approved sources of supply for class M are listed in MIL-HDBK-103. The vendors listed in MIL-HDBK-103 have agreed to this drawing and a certificate of compliance (see 3.6 herein) has been submitted to and accepted by DSCC-VA.

STANDARD MICROCIRCUIT DRAWING BULLETIN

DATE: 03-03-07

Approved sources of supply for SMD 5962-98636 are listed below for immediate acquisition information only and shall be added to MIL-HDBK-103 and QML-38535 during the next revision. MIL-HDBK-103 and QML-38535 will be revised to include the addition or deletion of sources. The vendors listed below have agreed to this drawing and a certificate of compliance has been submitted to and accepted by DSCC-VA. This bulletin is superseded by the next dated revision of MIL-HDBK-103 and QML-38535.

Standard microcircuit drawing PIN 1/	Vendor CAGE number	Vendor similar PIN 2/
5962R9863601VGA	24355	PM155AJ/QMLR
5962R9863601VPA	24355	PM155AZ/QMLR
5962R9863602VGA	24355	PM156AJ/QMLR
5962R9863602VPA	24355	PM156AZ/QMLR

1/ The lead finish shown for each PIN representing a hermetic package is the most readily available from the manufacturer listed for that part. If the desired lead finish is not listed contact the vendor to determine its availability.

2/ Caution. Do not use this number for item acquisition. Items acquired to this number may not satisfy the performance requirements of this drawing.

Vendor CAGE number	Vendor name and address
24355	Analog Devices RT 1 Industrial Park P.O. Box 9106 Norwood, MA 02062 Point of contact: 1500 Space Park Drive P.O. Box 58020 Santa Clara, CA 95050-8020

The information contained herein is disseminated for convenience only and the Government assumes no liability whatsoever for any inaccuracies in the information bulletin.