| CONN SIZE | FILTER DESIGNATION | FILTER CIRCUITS | CAPACITANCE MIN | CAPACITANCE MAX | 3 dB MAX CUTOFF FREQ (MHz) | DIELECTRIC WITHSTANDING VOLTAGE | CONTACT RATING | CONTACT RESIST | WORKING VOLTAGE DC −55°C TO +125°C | MINIMUM INSERTION LOSS−DECIBELS (dB) 5 MHz | 10 MHz | 20 MHz | 50 MHz | 100 MHz | 200 MHz | 500 MHz | 1 GHz |
|---|---|---|---|---|---|---|---|---|---|---|---|---|---|---|---|---|---|
| 15 | I | FT | 3000pF | 5000pF | – | 300V | 3A | .015 OHM MAX | 100V | 8 | 13 | 19 | 26 | 31 | 37 | 45 | 48 |

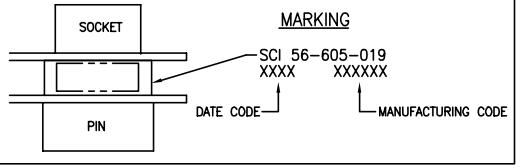


1. SHELL: NICKEL PLATED ZINC
2. INSULATORS: UL94V−0
3. CONTACTS: COPPER ALLOY: .000015 GOLD IN PIN MATING AREA AND .000030 IN SOCKET CONTACT MATING AREAS
4. RADIO FREQUENCY GROUND CONTACT FROM THE CONNECTOR SHELL TO THE MATING CONNECTOR IS ASSURED BY A COAXIAL SPRING CLIP ON PIN SIDE ONLY.

FILTER ELEMENT LOCATION

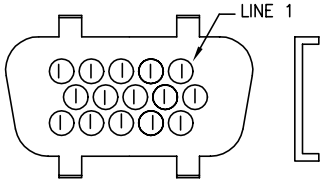


(I) = 54−600−631

ENGAGEMENT VIEW

THIS DOCUMENT CONTAINS PROPRIETARY INFORMATION AND IS COPYRIGHTED. EXCEPT WITH THE WRITTEN PERMISSION OF SPECTRUM CONTROL INC., OR ITS SUBSIDIARIES, SUCH INFORMATION SHALL NOT BE PUBLISHED OR DISCLOSED TO OTHERS OR USED FOR ANY PURPOSE AND THIS DOCUMENT SHALL NOT BE DUPLICATED IN WHOLE OR IN PART.

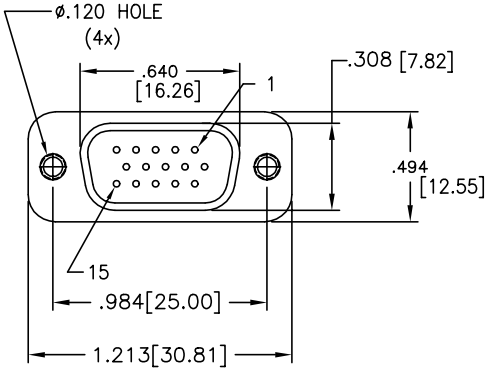


SOCKET VIEW

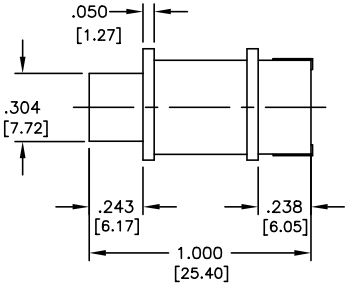


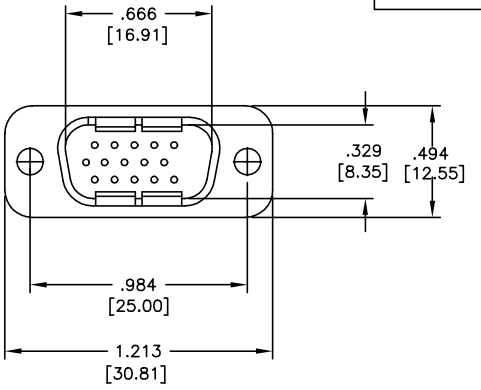


PIN VIEW

| REV. NO. | CHANGE NOTICE |
|---|---|
| 0 | CN 206371 |

UNLESS OTHERWISE SPECIFIED DIMENSIONS ARE IN INCHES.

CADD SCALE: FULL
PLOT SCALE: 2x

TOLERANCES UNLESS OTHERWISE SPECIFIED
Fractions ± 1/64
Dec. .xx±
Dec. .xxx± .015
Angles ±0° 30'

CODE IDENT. NO. 33095

SPECTRUM CONTROL INC.
CONNECTOR PRODUCTS DIVISION
ERIE, PENNSYLVANIA

Dwn. KRDZALIC
Date 3/18/02
Apvd.
Sheet 1 of 1

Description 15 PIN/SOCKET HI DENSITY ADAPTER FILTERED CONNECTOR

B 56−605−019

Quality Products From The Specialists In Electro−Magnetic Compatibility