ROHS COMPLIANT

PRODUCT DATA DRAWING

REVISION HISTORY			
REV	DESCRIPTION	DATE	APPROVED
-	DCN 40120	10/13	STW

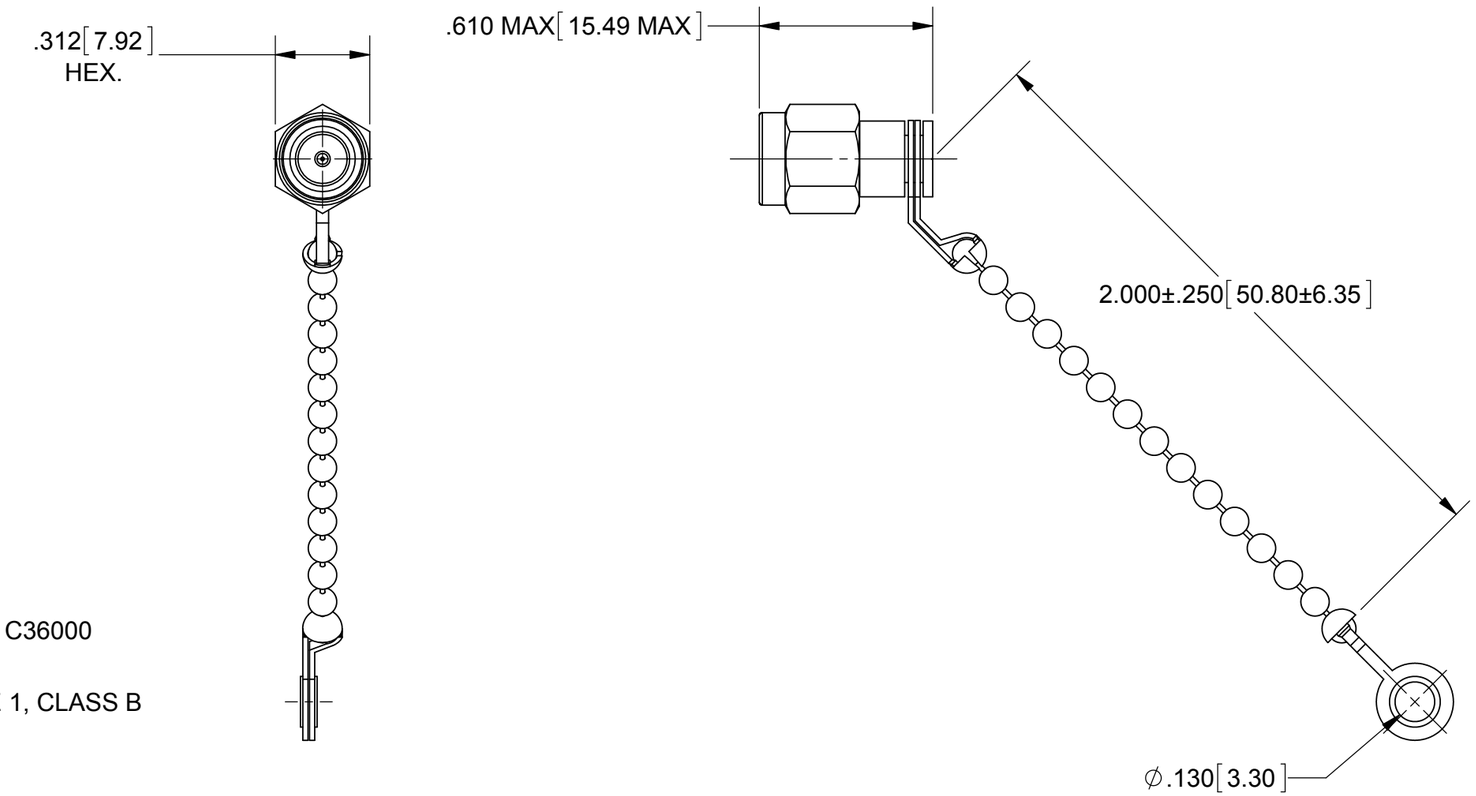

MATERIAL:

BODY, PRESS CAP & COUPLING NUT:	STAINLESS STEEL PER AMS-5640, ALLOY UNS S30300, TYPE 1
LOCK RING & CONTACT:	BERYLLIUM COPPER PER ASTM B196, ALLOY No. UNS C17300, TD04
RIVET:	BRASS PER ASTM B16, ALLOY UNS No. C36000
INSULATOR:	PTFE PER ASTM D1710, TYPE I, GRADE 1, CLASS B
GASKET:	SILICONE RUBBER PER A-A-59588, CLASS 2B, GRADE 50/60
ROD RESISTOR:	ALUMINA
CHAIN ASSEMBLY:	STAINLESS STEEL

FINISH:

BODY, PRESS CAP, COUPLING NUT & CONTACT:	GOLD PER ASTM B488, TYPE II, CODE C, CLASS 1.27, OVER NICKEL PER AMS-QQ-N-290, CLASS 1, .00005" MIN.
RIVET:	NICKEL PER QQ-N-290, .0002" MIN.

PERFORMANCE:

IMPEDANCE:	50 OHMS
FREQ. RANGE:	2.0 TO 19.0 GHz
VSWR:	1.30:1, 2.0 TO 19.0 GHz

MATERIAL: SEE NOTES

FINISH: SEE NOTES

SURFACE AREA: N/A

PROPRIETARY

THE INFORMATION CONTAINED IN THIS DRAWING IS THE SOLE PROPERTY OF SV MICROWAVE, INC. ANY REPRODUCTION IN PART OR AS A WHOLE WITHOUT THE WRITTEN PERMISSION OF SV MICROWAVE, INC IS PROHIBITED.

DIMENSIONS ARE IN INCHES TOLERANCES:

FRACTIONAL: ±1/64 ANGULAR: X° ±1°0' X°X' ±15'

DECIMAL: .X ±.030 .XX ±.010 .XXX ±.005

INTERPRET DIMENSIONS AND TOLERANCES PER ASME Y14.5M - 1994

THIRD ANGLE PROJECTION

UNLESS OTHERWISE SPECIFIED

1) ALL DIMENSIONS ARE IN INCHES [MILLIMETERS]
2) ALL DIMENSIONS ARE AFTER PLATING.
3) BREAK CORNERS & EDGES .005 R. MAX.
4) CHAM. 1ST & LAST THREADS.
5) SURFACE ROUGHNESS 63-MIL-STD-10.
6) DIA.'S ON COMMON CENTERS TO BE CONCENTRIC WITHIN .005 T.I.R.
7) REMOVE ALL BURRS

DRAWN:	FSG 10/09/13
CHECKED:	STW 10/09/13
APPROVED:	STW 10/09/13

SV Microwave, Inc.

2400 Centrepark West Drive, Suite 100
West Palm Beach, FL 33409

TITLE: SMA PLUG TERMINATION 1/2 WATT

SIZE	CAGE CODE	DWG. NO.
B	95077	M39030/3-13

SCALE: 2:1

SHEET 1 OF 1