P/N	Ø A
−1CC	.0360±.0005
−1CCSF	
−1CCCE	
−1CCCESF	
−2CC	.0200±.0005
−2CCSF	
−2CCCE	
−2CCCESF	
−3CC	.0100±.0005
−3CCSF	
−3CCCE	
−3CCCESF	
−4CC	.0120±.0005
−4CCSF	
−4CCCE	
−4CCCESF	

P/N	Ø A
−5CC	.0150±.0005
−5CCSF	
−5CCCE	
−5CCCESF	
−6CC	.0180±.0005
−6CCSF	
−6CCCE	
−6CCCESF	
−7CC	.0080±.0005
−7CCSF	
−7CCCE	
−7CCCESF	

REVISIONS			
REV	DESCRIPTION	DATE	BY
C	ECO 25859	06.11.12	P.MAO

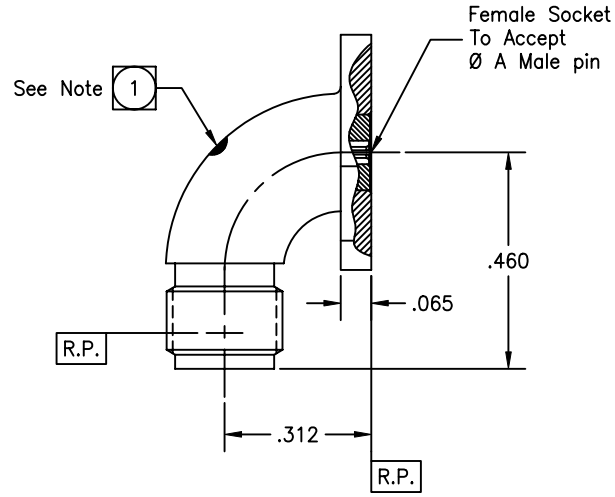

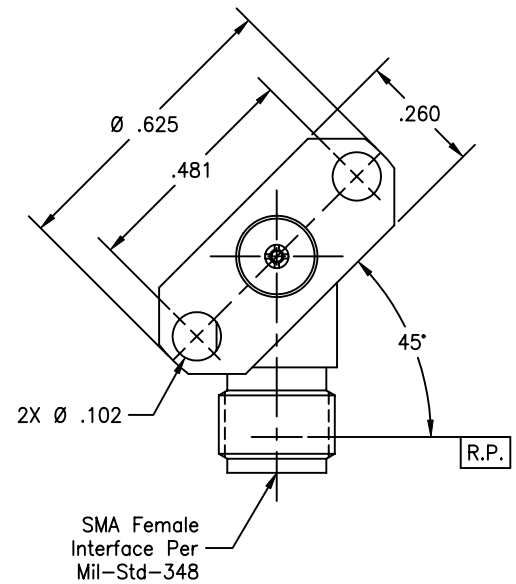

Note(s):

1. Conductive epoxy is required for part numbers end with CCCE or CCCESF.

MATERIAL(S):

Body:
304 sst per SAE−AMS−5511.
Center Conductor:
BeCu alloy per ASTM B−196.
Dielectric:
PTFE per ASTM D−1710.
Epoxy: (for CC's)
Sigma VF Type HV.
Conductive Epoxy: (for CCCE's)
Ablebond 16−1
or Eccobond 56C.

ELECTRICAL(S):

Impedance: 50 Ohms nominal.
Frequency Range: DC to 18 GHz.
Typical VSWR: 1.06 + .005 X f(GHz).
Insertion Loss: $.08\sqrt{f(GHz)}$ dB.
Working Voltage: 335 Vrms max @ sea level.
Dielectric Withstanding Voltage: 1,500 Vrms min.
R.F. HiPot Voltage: 1,000 Vrms min @ 5MHz.
Corona Level: 375 Vrms @ 70,000 ft.
Insulation Resistance: 5,000 MegOhms min.
R.F. Leakage: −60 dB min. from 2−3 GHz (for CC's).
−(90−fGHz) dB min. from 2−3 GHz (for CCCE's).
Contact Resistance:
Initial:
Center Contact: 3.0 Milliohm max.
Outer Contact: 2.0 Milliohm max.
After Environment:
Center Contact: 4.0 Milliohm max.
Outer Contact: NA.

MECHANICAL(S):

Mating Characteristics:
Interface per Mil−Std−348.
Force To Engage & Disengage:
Torque: 2 inch−pounds max.
Longitudinal Force: NA.
Center Contact Retention Force:
Axial Force: 6 pound min.
Center Contact Captivation:
Axial Force: 6 pounds max.
Radial Torque: 4 inch−ounces max.
Connector Durability:
500 cycles min @ 12 cycles/minute max.
Permeability: Less than 2.0 mu.

ENVIRONMENTAL(S):

Temperature Range: −65°C to +150°C.
Thermal Shock:
Mil−Std−202, Method 107, Test Cond. C.
Moisture Resistance:
Mil−Std−202, Method 106, Insulation resistance at least 200 MegOhms within 5 minutes after removal from humidity.
Corrosion:
Mil−Std−202, Method 101, Test Cond. B.
Vibration:
Mil−Std−202, Method 204, Test Cond. D.
Shock:
Mil−Std−202, Method 213, Test Cond. I.

FINISH(ES):

Body: (for SF's)
Passivate per ASTM A−967.
Body: (for CC's)
Gold plate per ASTM B−488, Type II, Code C, Class 0.25, over nickel under plate per SAE−AMS−QQ−N−290, Class 1.
Center Conductor:
Gold plate per ASTM B−488, Type II, Code C, Class 1.25, over nickel under under plate per SAE−AMS−QQ−N−290, Class 1.

APPLICABLE CARLISLE IT DOCUMENTS

WORK STD	PROD INST	ASSY INST
NA	NA	NA

NOTICE
THIS DRAWING EMBODIES A CONFIDENTIAL PROPRIETARY DESIGN ORIGINATED BY CARLISLE INTERCONNECT TECHNOLOGIES AND ALL DESIGN, MANUFACTURING, REPRODUCTION, USE AND SALE RIGHTS REGARDING THE SAME ARE EXPRESSLY RESERVED. IT IS SUBMITTED UNDER A CONFIDENTIAL RELATIONSHIP FOR A SPECIFIED PURPOSE AND THE RECIPIENT AGREES BY ACCEPTING THIS DRAWING NOT TO SUPPLY OR DISCLOSE ANY INFORMATION REGARDING IT TO ANY UNAUTHORIZED PERSON TO INCORPORATE INOTHER PROJECTS ANY SPECIAL FEATURE PECULIAR TO THIS DESIGN. ALL PATENT RIGHTS HERETO ARE EXPRESSLY RESERVED BY CARLISLE INTERCONNECT TECHNOLOGIES, CERRITOS, CA 90703

TOLERANCES AND NOTES EXCEPT AS NOTED
DIMENSIONS ARE IN INCHES.
LINEAR .XX ±.015 .XXX ±.005 ANGULAR ± 1/2°
FRACTION ± 1/32

1. MACHINE FINISH: 63√ RMS
2. BREAK ALL SHARP EDGES .003 MAX.
3. MACHINED FILLETS .005 MAX.
4. MACHINED SURFACES SQUARE TO RESPECTIVE AXIS WITHIN .005 INCHES PER INCH.
5. MACHINED DIAMETERS CONCENTRIC WITHIN .002 T.I.R.
6. DIMENSIONS TO BE MET BEFORE PLATING.
7. CHAMFER ALL THREADS 45°.
8. THREADS PER H−28.
9. REMOVE FRAYED EDGES ON TEFLON.
10. REMOVE ALL BURRS.

MATERIAL		
APPROVAL	INITIALS	DATE
DRAWN BY	R.C.	03.21.02
CHECKED BY	PM	06.15.12
TEST ENGG		
QUALITY		
DESIGN ENGG	DNG	12.21.07
MFG ENGG		
ECO APPRV	PM	06.15.12

–	–	–
MATERIAL	SPECIFICATION	PROCUREMENT

CARLISLE Interconnect Technologies Cerritos, CA 90703

TITLE: SMA FEMALE RADIUS R/A 2 HOLE FLANGE MOUNT, 45° RIGHT, FIELD REPLACEABLE

SCALE: 5:1 | SUB−DIRECTORY: _OUTLINE\OL_\ | SHEET 1 OF 1

SIZE: C | CAGE CODE: 30990 | DRAWING NO.: 5660 | REV.: C

FNG−DWG RFV. F