RADIALL The next conneXion

TECHNICAL DATA SHEET

616 210

Series		Issue:	Page
DSX	CRIMP REMOVABLE SIZE 20HD PIN CONTACT WIRE SIZE 20-22-24	JULLY 31 2008	1/1

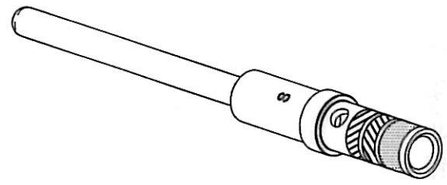

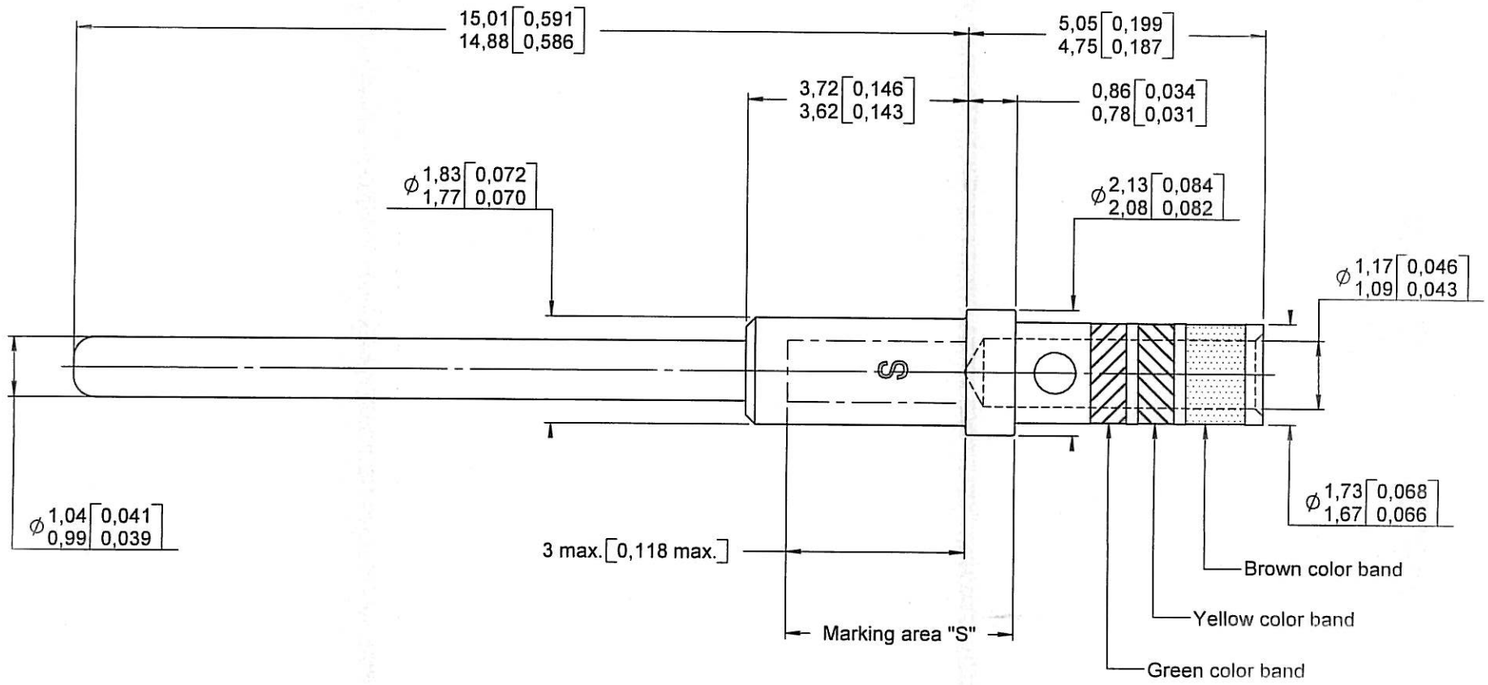

WIRES ACCOMODATED : AWG 20-22-24
INSULATOR DIAMETER : .071 MAX (1,80)
STRIP LENGHT : .158 (4,00)

TOOLING
CRIMPING TOOL : M22520/2-01 (RADIALL 282 281)
SELECTOR POSITION : 7 FOR AWG 20
6 FOR AWG 22
5 FOR AWG 24
POSITIONER : M22520/2-08 (RADIALL 282 971)

MATERIAL AND FINISHES :
BODY CONTACT : COPPER ALLOY (C97) HEAT TREATED HARDNESS 200 HV MAXI
BARREL ANNEALED HARDNESS 60-80 HV

PLATING : .00005 INCH OF GOLD PER SAE AMS-2422 OVER NICKEL PER SAE AMS-QQ-N-290

INSERTION/EXTRACTION TOOL : M81969/1-02 (RADIALL 282 886)
SPL RADIALL INS. 282 881 / EXT. 282 891

DIMENSIONS : mm (inch are given for information only)

CREATION				
PEN: /				
NOM: FALETTI				
DATE: MAR. 22 1985	07 31 08	REDRAWN	VALGRESY	
APPR.:	Issue	Revisions	Name	Approved

This information is given as an indication.In the continual goal to improve our products,we reserve the right to make any modifications judged necessary.

4112_9311

RADIALL PROPRIETARY INFORMATION