P/N	Ø A	(Ø B)	CABLE TYPE
−1	.143 MIN	.185	Ø .141 S/R
−1SF	.143 MIN	.185	Ø .141 S/R
−2	.088 MIN	.185	Ø .085 S/R
−2SF	.088 MIN	.185	Ø .085 S/R
−3	.143 MIN	.185	Ø .141 MICROPOROUS
−3SF	.143 MIN	.185	Ø .141 MICROPOROUS
−4	.253 MIN	.340	Ø .250 S/R
−4SF	.253 MIN	.340	Ø .250 S/R

REVISIONS				
ZONE	REV	DESCRIPTION	DATE	BY
–	A	ECO 20177	04.23.07	DKN

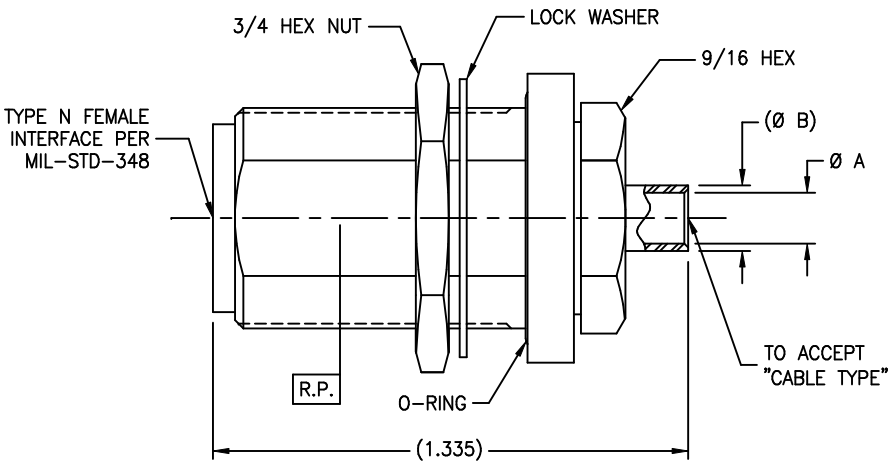

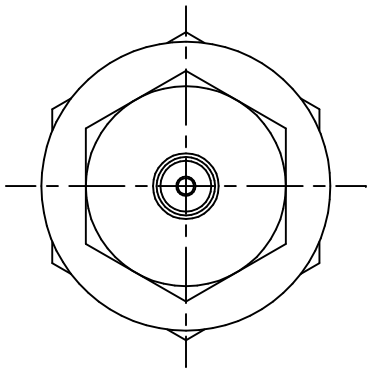

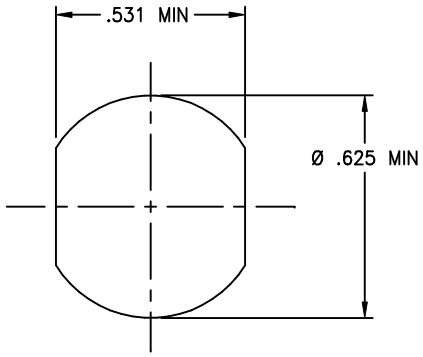

RECOMMENDED MOUNTING HOLE

DRAWING NO.	REV.
8011	A

MATERIAL(S):

Body, Locknut & Cable Insert:
303 sst per ASTM A−582.
Center Conductor:
BeCu alloy per ASTM B−196.
Insulator:
PTFE per ASTM D−1710.
Gasket:
Silicone per A−A−59588.
O−Ring:
Silicone S613−60 or S604−70.
Lockwasher:
410 sst per ASTM B−139.

ELECTRICAL(S):

Impedance: 50 Ohms nominal.
Frequency Range: DC to 18.0 GHz.
VSWR: 1.10 + .01 f(GHz).
Insertion Loss: .047 √f(GHz).
Working Voltage: 335 Vrms max @ sea level.
Dielectric Withstanding Voltage: 1500 Vrms min.
R.F. HiPot Voltage: 1000 Vrms min @ 5MHz.
Corona Level: 375 Vrms @ 70,000 ft.
Insulation Resistance: 5000 MegOhms min.
R.F. Leakage: −90 dB min 2−3 GHz.
Contact Resistance:
Initial:
Center Contact: 3.0 Milliohm max.
Outer Contact: 2.0 Milliohm max.
After Environment:
Center Contact: 4.0 Milliohm max.
Outer Contact: NA.

MECHANICAL(S):

Mating Characteristics:
Interface per Mil−Std−348.
Force To Engage & Disengage:
Torque: 6 inch−pounds max.
Longitudinal Force: NA.
Connector Durability:
500 cycles min @ 12 cycles/minute max.
Permeability: Less than 2.0 mu.

ENVIRONMENTAL(S):

Temperature Range: −65°C to +165°C.
Thermal Shock:
Mil−Std−202, Method 107, Test Cond. B.
Moisture Resistance:
Mil−Std−202, Method 106, Insulation resistance at least 200 MegOhms within 5 minutes after removal from humidity.
Corrosion:
Mil−Std−202, Method 101, Test Cond. B.
Vibration:
Mil−Std−202, Method 204, Test Cond. D.
Shock:
Mil−Std−202, Method 213, Test Cond. I.

FINISH(ES):

Body & Locknut:
(for SF's): Passivate per ASTM A−967.
(for other's): Gold plate per ASTM B−488, over nickel under plate per AMS−QQ−N−290.
Center Conductor & Cable Insert:
Gold plate per ASTM B−488, over nickel under plate per AMS−QQ−N−290.

APPLICABLE TENSOLITE DOCUMENTS

WORK STD	PROD INST	ASSY INST
NA	NA	NA

NOTICE

THIS DRAWING EMBODIES A CONFIDENTIAL PROPRIETARY DESIGN ORIGINATED BY TENSOLITE COMPANY AND ALL DESIGN, MANUFACTURING REPRODUCTION, USE AND SALE RIGHTS REGARDING THE SAME ARE EXPRESSLY RESERVED. IT IS SUBMITTED UNDER A CONFIDENTIAL RELATIONSHIP FOR A SPECIFIED PURPOSE AND THE RECIPIENT AGREES BY ACCEPTING THIS DRAWING NOT TO SUPPLY OR DISCLOSE ANY INFORMATION REGARDING IT TO ANY UNAUTHORIZED PERSON TO INCORPORATE IN OTHER PROJECTS ANY SPECIAL FEATURES PECULIAR TO THIS DESIGN. ALL PATENT RIGHTS HERETO ARE EXPRESSLY RESERVED BY TENSOLITE COMPANY, LONG BEACH, CALIFORNIA 90815.

TOLERANCES AND NOTES EXCEPT AS NOTED

DIMENSIONS ARE IN INCHES.
LINEAR .XX ±.015 .XXX ±.005 ANGULAR ± 1/2°
FRACTION ± 1/32

1. MACHINE FINISH: 63 √ RMS
2. BREAK ALL SHARP EDGES .003 MAX.
3. MACHINED FILLETS +.005 −.000 MAX.
4. MACHINED SURFACES SQUARE TO RESPECTIVE AXIS WITHIN .003 INCHES PER INCH.
5. MACHINED DIAMETERS CONCENTRIC WITHIN .002 T.I.R.
6. DIMENSIONS TO BE MET BEFORE PLATING.
7. CHAMFER ALL THREADS 45°.
8. THREADS PER H−28
9. REMOVE FRAYED EDGES ON TEFLON.
10. REMOVE ALL BURRS.

MATERIAL			SIZE	SPECIFICATION	PROCUREMENT
–			–	–	–

APPROVAL INITIALS		DATE
DRAWN BY	R.C.	04.08.02
CHECKED BY		
TEST ENGG		
QUALITY		
DESIGN ENGG	M.P.	04.24.07
MFG ENGG		

Tensolite
HIGH PERFORMANCE CABLES & INTERCONNECT SYSTEMS
Long Beach, California 90815

TITLE: TYPE N FEMALE BULKHEAD FEEDTHROUGH TO SEMI−RIGID CABLE

SCALE	SUB−DIRECTORY\FILENAME	SHEET
4:1	OL_\	1 OF 1

SIZE	CAGE CODE	DRAWING NO.	REV.
C	30990	8011	A

ENG−DWG REV. B