A28F5670

JULIE

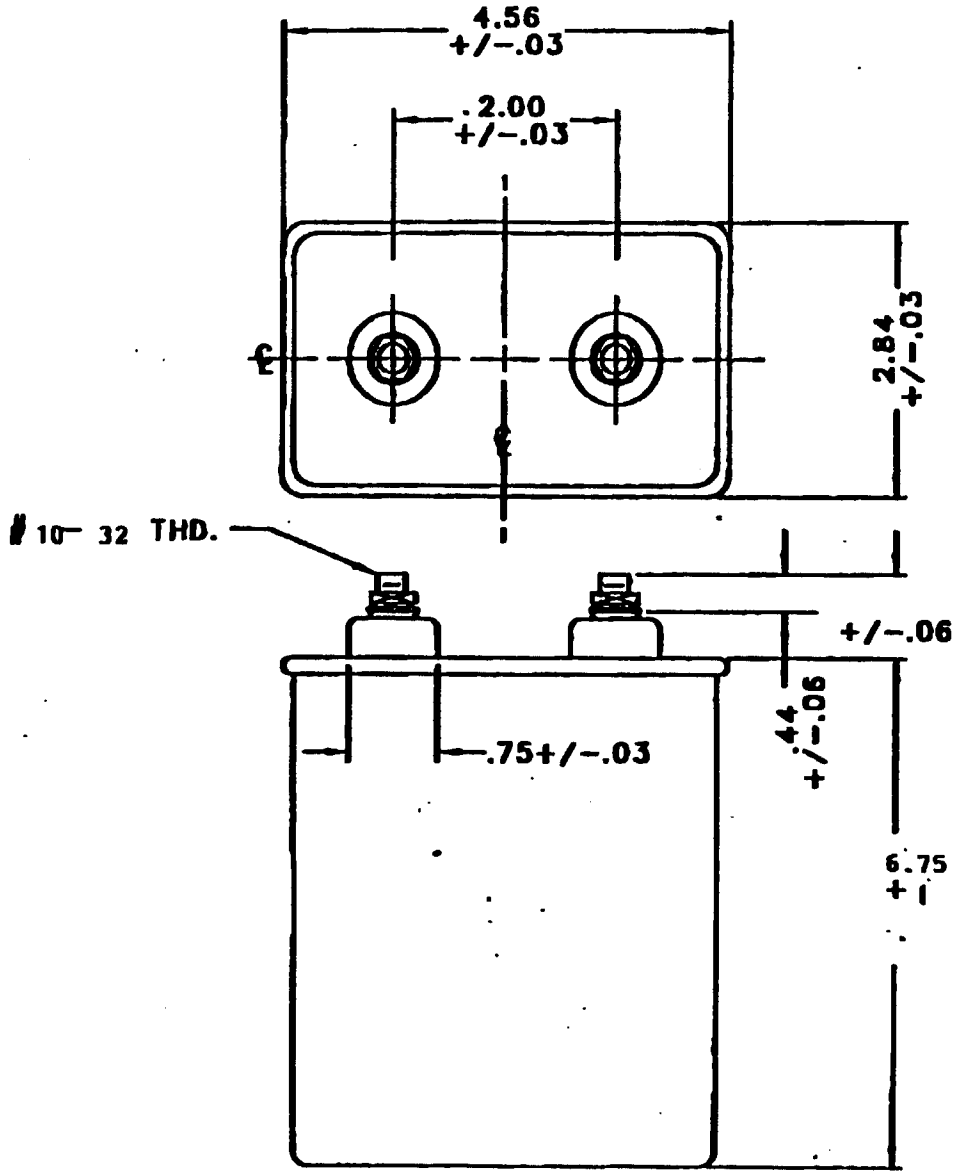


| VOLTS | UF | HZ | PH |
|---|---|---|---|
| 2000 DC | 10 | | |

| | | | |
|---|---|---|---|
| GENERAL ELECTRIC<br>CAP. & PWR PROTECTION OPER. LCTN: HUDSON FALLS NY | SIZE A | FSCM NO | OUTLINE<br>28F5670 |
| DRAWN | | | |
| ISSUED | SCALE | 35R87-73 | SHEET 2 |

DISTR TO