THIS DRAWING IS UNPUBLISHED. RELEASED FOR PUBLICATION 20
© COPYRIGHT 20 BY TYCO ELECTRONICS CORPORATION. ALL RIGHTS RESERVED.

LOC	DIST
GE	00

REVISIONS

P	LTR	DESCRIPTION	DATE	DWN	APVD
	D	REV PER ECR-06-003051	09FEB2006	WH	RS

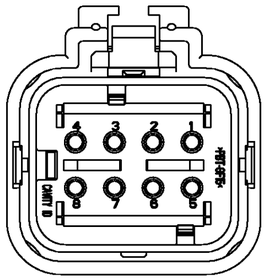

776494-2
SCALE 2:1

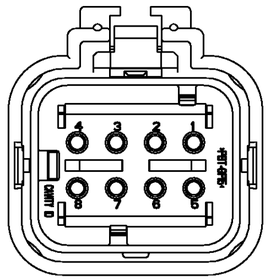

776494-3
SCALE 2:1

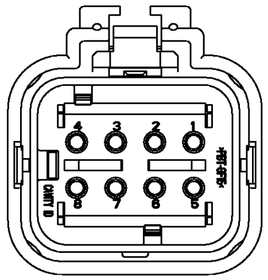

776494-4
SCALE 2:1

1. MATERIAL: 15% GLASS FILLED THERMOPLASTIC
COLOR: BLACK

2. MATERIAL: 15% GLASS FILLED THERMOPLASTIC
COLOR: (SEE TABLE)

3. MATERIAL: SILICONE
COLOR: YELLOW

4. MATERIAL: 15% GLASS FILLED THERMOPLASTIC
COLOR: RED

5. RECOMMENDED WIRE DIAMETER RANGE IS 2.18 TO 3.67mm.

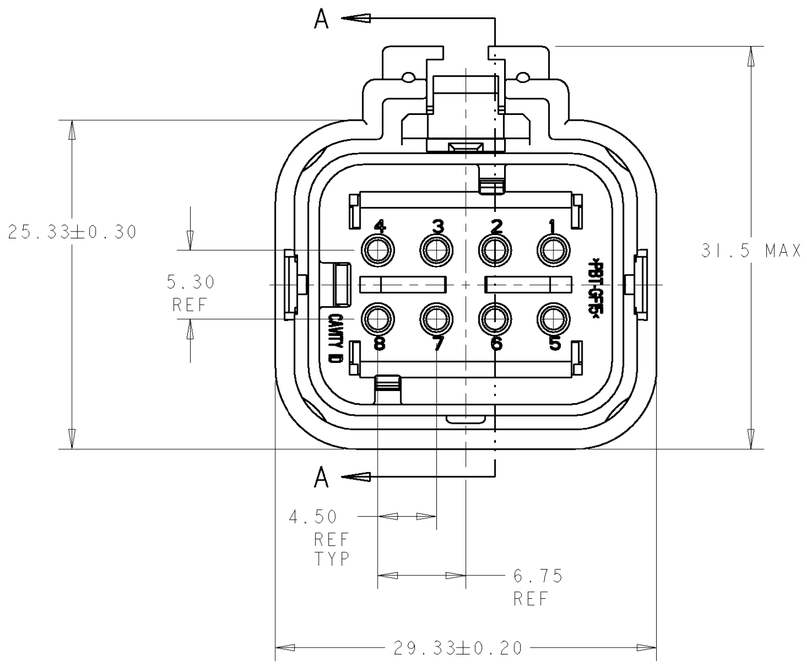

776494-1 SHOWN

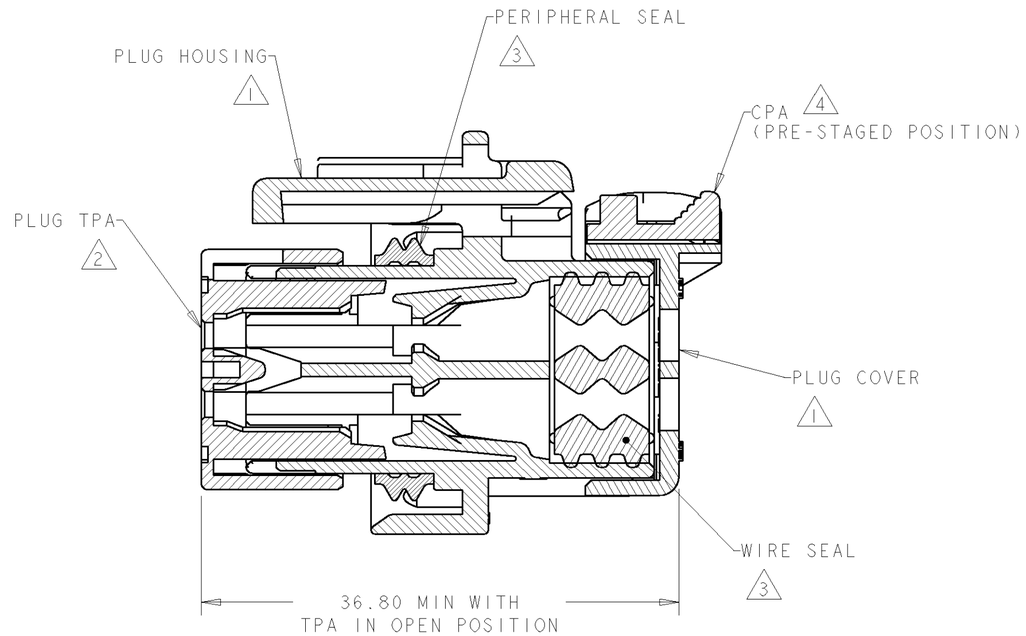

SECTION A-A

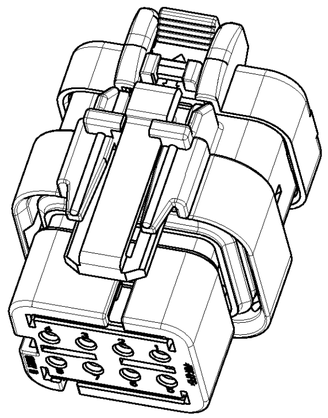

SCALE 2:1

TPA COLOR	PART NUMBER
GREEN	776494-4
YELLOW	776494-3
GRAY	776494-2
RED	776494-1

THIS DRAWING IS A CONTROLLED DOCUMENT FOR TYCO ELECTRONICS CORPORATION. IT IS SUBJECT TO CHANGE AND THE CONTROLLING ENGINEERING ORGANIZATION SHOULD BE CONTACTED FOR THE LATEST REVISION.

DIMENSIONS: mm

TOLERANCES UNLESS OTHERWISE SPECIFIED:
0 PLC ±-
1 PLC ±-
2 PLC ±-
3 PLC ±-
4 PLC ±-
ANGLES ±-

MATERIAL -
FINISH -

DWN B.SIMPSON 05NOV2002
CHK D. KLEIN 05NOV2002
APVD D. KLEIN 05NOV2002
PRODUCT SPEC -
APPLICATION SPEC 114-13065
WEIGHT -

tyco Electronics
AMP Incorporated
Harrisburg, PA 17105-3608

NAME
PLUG ASSEMBLY,
8 POSITION,
DUAL ROW, AMPSEAL 16

SIZE	CAGE CODE	DRAWING NO	RESTRICTED TO
A2	00779	C-776494	-

CUSTOMER DRAWING
SCALE 3:1 SHEET 1 OF 1 REV D

THIS AMP PROPRIETARY INFORMATION IS CONFIDENTIAL AND IS DISCLOSED TO YOU ON CONDITION THAT NO FURTHER DISCLOSURE IS MADE BY YOU TO ANYONE OTHER THAN AMP PERSONNEL WITHOUT WRITTEN AUTHORIZATION FROM AMP INCORPORATED, HARRISBURG, PA.