THIS DRAWING CONTAINS PROPRIETARY INFORMATION AND IS NOT TO BE USED OR REPRODUCED WITHOUT THE PERMISSION OF SensorView Co,. Ltd

REVISION		
NO.	CHANGE CONTENTS	CHANGE CAUSE

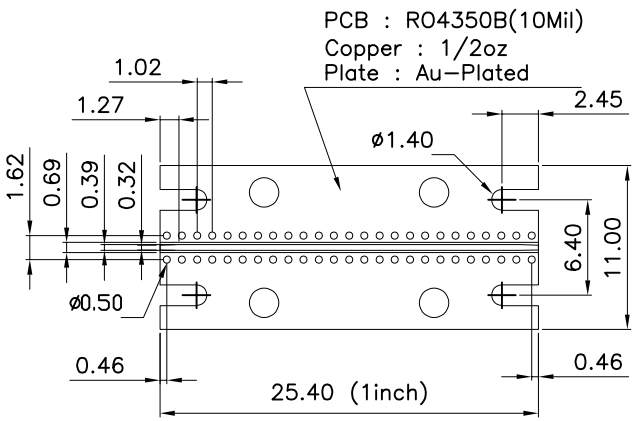

RECOMMENDED PCB LAYOUT

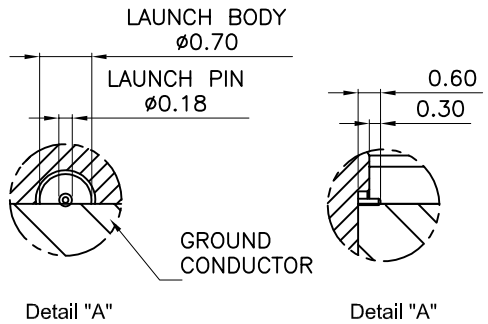

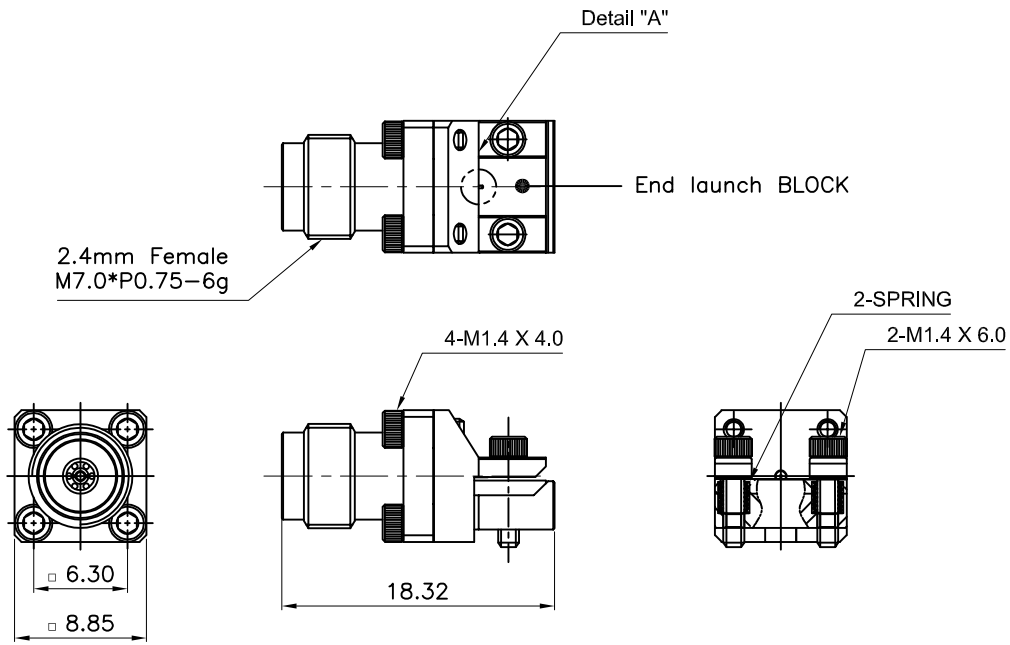

Note

1. Electrical
   - 1.1 Frequency Range : DC~50GHz
   - 1.2 Impedance : 50Ω Nominal
   - 1.3 VSWR : 1.5 Max.
   - 1.4 Insertion Loss : −0.05 x √f [f:Frequency(GHz)]
   - 1.5 Insulation Resistance : 5 GΩ Min.
2. Mechanical
   - 2.1 Durability : 500 Cycles
3. Environmental
   - 3.1 Temperature Range : −40℃ ~ +110℃
4. MATERIALS(Connector)
   - 4.1 Body
     Brass (C3604)(ASTM B 16), Ni Plated
   - 4.2 Center Conductor
     BeCu(C1730B), ASTM B196B/196M, Au Plated
   - 4.3 Insulator
     PTFE (ASTM D 1710)

lead-free

RoHS COMPLIANT

MATERIAL	SEE NOTE		DRAW	DESIGN	CHECK	APPRO.	TITLE	2P4FEL-004 Sales Drawing
FINISH	SEE NOTE		DU.LEE		DU.LEE	JH.LIM		
TOLERANCE	Decimal	Angle					P/N	CCA500PBZ004
	±0.3	±3.0°	22.05.24		22.05.24	22.05.24		
SCALE	2/1	UNIT mm	MODEL	End Launch			SENSORVIEW	A4
REVISION	00	SHEET 1/1						