THIS DRAWING IS UNPUBLISHED. RELEASED FOR PUBLICATION - ,- .
© COPYRIGHT - BY TYCO ELECTRONICS CORPORATION. ALL INTERNATIONAL RIGHTS RESERVED.

LOC	DIST
AD	00

REVISIONS

P	LTR	DESCRIPTION	DATE	DWN	APVD
	J1	REVISED PER ECO-08-024946	14OCT08	HMR	NE

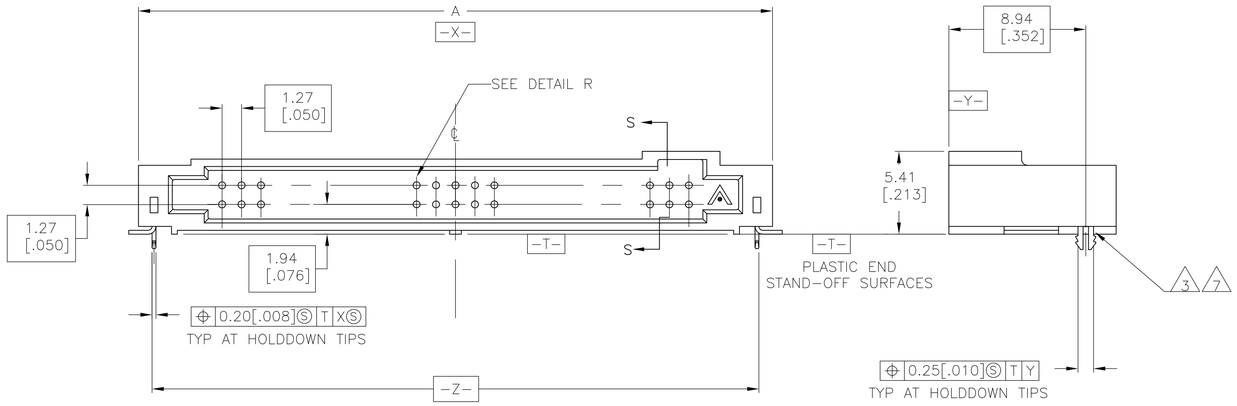

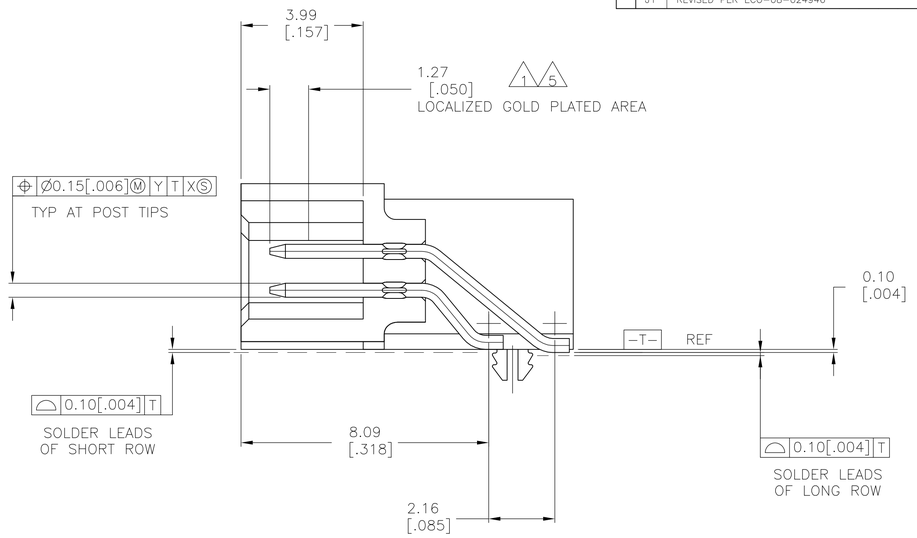

SECTION S-S

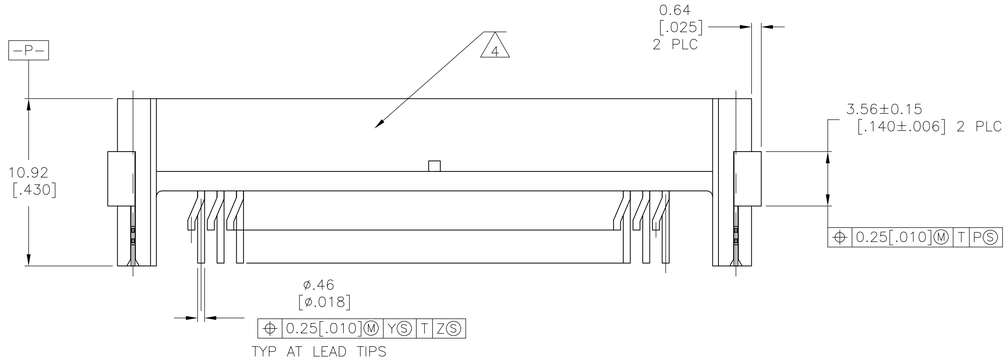

1. 0.00076 [.000030] GOLD IN LOCALIZED PLATE AREA 0.00381 [.000150] TIN-LEAD ON SOLDER LEADS ALL OVER 0.00127 [.000050] NICKEL
2. USE 1.32±0.02 [.0520±.0010] DRILLED HOLE (#55 DRILL) FINISH TO BE TIN-LEAD OVER 0.02 [.001] MIN COPPER
3. PLATING: 0.0038 [.000150] TIN-LEAD OVER 0.00127 [.000050] NICKEL
4. SERRATIONS OPTIONAL THIS SURFACE.
5. 0.00076 [.000030] GOLD IN LOCALIZED PLATE AREA 0.00381 [.000150] TIN ON SOLDER LEADS ALL OVER 0.00127 [.000050] NICKEL
6. PRELIMINARY PART - NOT RELEASED FOR PRODUCTION.
7. PLATING: 0.0038 (.00015) TIN OVER .00127 (.000050) NICKEL.
8. USE 1.32+/-0.02 (.052+/-.0010) DRILLED HOLE (#55 DRILL) FINISH TO BE TIN OVER 0.02 (.001) MIN COPPER
9. ROHS 2002/95/EC COMPLIANT.

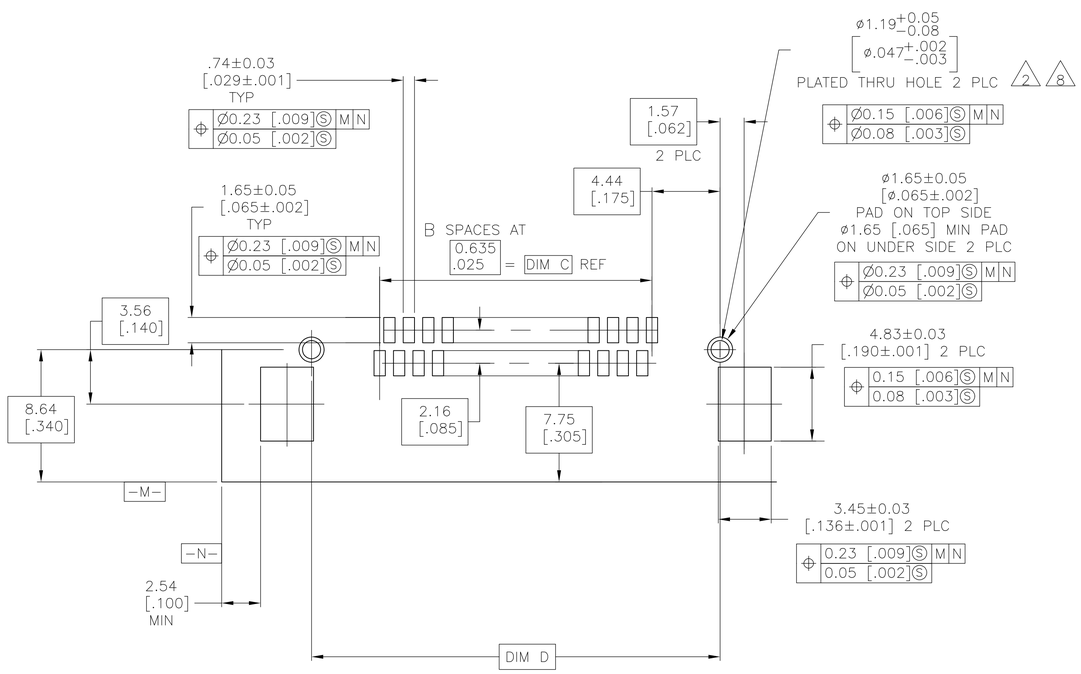

RECOMMENDED BOARD LAYOUT

SCALE 5:1

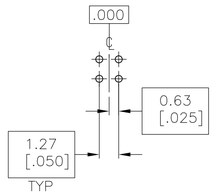

BASIC DIMENSIONS FOR ODD NO OF SPACES (SEE TABLE)

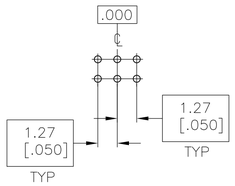

BASIC DIMENSIONS FOR EVEN NO OF SPACES (SEE TABLE)

DETAIL R

9 5 7	49	71.12 [2.800]	62.87 [2.475]	99	73.15 [2.880]	100	6-104894-0
9 5 7	44	64.77 [2.550]	56.52 [2.225]	89	66.80 [2.630]	90	5-104894-9
9 5 7	39	58.42 [2.300]	50.17 [1.975]	79	60.45 [2.380]	80	5-104894-8
9 5 7	34	52.07 [2.050]	43.82 [1.725]	69	54.10 [2.130]	70	5-104894-7
9 5 7	29	45.72 [1.800]	37.47 [1.475]	59	47.75 [1.880]	60	5-104894-6
9 5 7	24	39.37 [1.550]	31.12 [1.225]	49	41.40 [1.630]	50	5-104894-5
9 5 7	19	33.02 [1.300]	24.77 [.975]	39	35.05 [1.380]	40	5-104894-4
9 5 7	14	26.67 [1.050]	18.42 [.725]	29	28.70 [1.130]	30	5-104894-3
9 5 7	9	20.32 [.800]	12.07 [.475]	19	22.35 [.880]	20	5-104894-2
9 5 7	4	13.97 [.550]	5.72 [.225]	9	16.00 [.630]	10	5-104894-1
6 5 7	24	39.37 [1.550]	31.12 [1.225]	49	41.40 [1.630]	50	1-104894-5
6 5 7	14	26.67 [1.050]	18.42 [.725]	29	28.70 [1.130]	30	1-104894-3
1 3	49	71.12 [2.800]	62.87 [2.475]	99	73.15 [2.880]	100	1-104894-0
1 3	44	64.77 [2.550]	56.52 [2.225]	89	66.80 [2.630]	90	104894-9
1 3	39	58.42 [2.300]	50.17 [1.975]	79	60.45 [2.380]	80	104894-8
1 3	34	52.07 [2.050]	43.82 [1.725]	69	54.10 [2.130]	70	104894-7
1 3	29	45.72 [1.800]	37.47 [1.475]	59	47.75 [1.880]	60	104894-6
1 3	24	39.37 [1.550]	31.12 [1.225]	49	41.40 [1.630]	50	104894-5
1 3	19	33.02 [1.300]	24.77 [.975]	39	35.05 [1.380]	40	104894-4
1 3	14	26.67 [1.050]	18.42 [.725]	29	28.70 [1.130]	30	104894-3
1 3	9	20.32 [.800]	12.07 [.475]	19	22.35 [.880]	20	104894-2
1 3	4	13.97 [.550]	5.72 [.225]	9	16.00 [.630]	10	104894-1
FINISH	NO. OF SPA (SEE DETAIL R)	D	C	B	A	NUMBER OF POSITIONS	PART NUMBER

THIS DRAWING IS A CONTROLLED DOCUMENT.

DIMENSIONS: mm [INCHES]

TOLERANCES UNLESS OTHERWISE SPECIFIED:
0 PLC ± -
1 PLC ± -
2 PLC ± 0.13[.005]
3 PLC ± -
4 PLC ± -
ANGLES ± -

MATERIAL: HOUSING: LCP, COLOR BLACK; CONTACT: BRASS; HOLDDOWN: COPPER ALLOY

FINISH: SEE TABLE

DWN J.HERRINGTON 18-6-93
CHK D.SREMCICH 24-6-93
APVD D.DUPLER 24-6-93

PRODUCT SPEC 108-1332
APPLICATION SPEC 114-7010
WEIGHT -

CUSTOMER DRAWING

Tyco Electronics
Tyco Electronics Corporation
Harrisburg, PA 17105-3608

NAME: ASSEMBLY, HEADER, RIGHT ANGLE, DOUBLE ROW, AMPMODU 50/50 GRID CONNECTOR

SIZE	CAGE CODE	DRAWING NO	RESTRICTED TO
A1	00779	C-104894	-

SCALE 5:1 SHEET 1 OF 1 REV J1

4805 (1/08)