THIS DRAWING IS UNPUBLISHED. RELEASED FOR PUBLICATION -,- .
© COPYRIGHT - BY TYCO ELECTRONICS CORPORATION. ALL RIGHTS RESERVED.

LOC	DIST
00	HC

REVISIONS

P	LTR	DESCRIPTION	DATE	DWN	APVD
	B	REVISED PER 0S14-0174-03.	13AUG03	JGH	JGH

DESIGNED FOR USE WITH .085 SEMI-RIGID CABLE	
CABLE ENTRY DIAMETER MINIMUM	
CONTACT	.021
HOUSING	.089

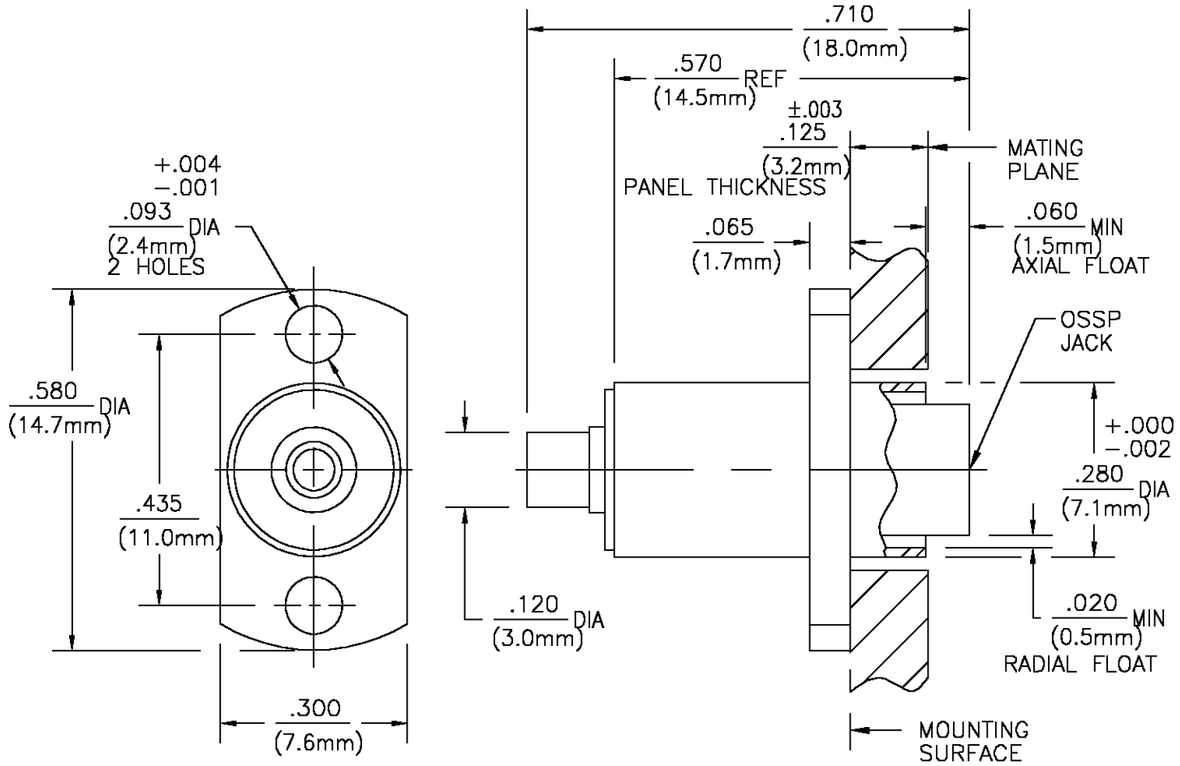

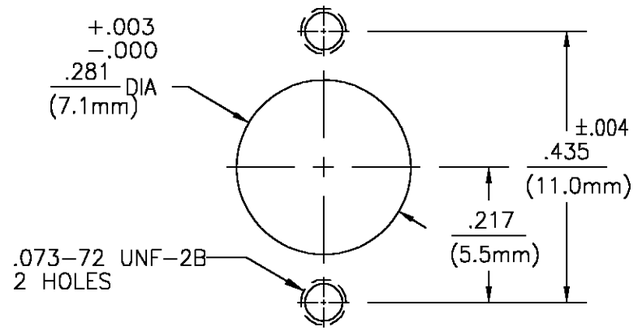

RECOMMENDED MOUNTING PATTERN

ELECTRICAL	
Nominal Impedance (Ohms)	50
Frequency Range (GHz)	DC to 28
Volt Rating (VRMS MAX)	
@ Sea Level	335
VSWR	1.05+.01f(GHz)
Insertion Loss (dB MAX)	$.04 \times \sqrt{f(GHz)}$
RF Leakage (dB MIN) (Interface Only,	
Fully Mated)	−(90−f(GHz))
Corona, 70,000 Ft (VRMS MIN)	250
Dielectric Withstanding Voltage	
(VRMS MIN) @ Sea Level	675
Contact Resistance (Milliohms MAX)	
Center Contact	6.0
Outer Contact	3.0
Cable to Housing	0.5
RF High Potential @ Sea Level	
(VRMS MIN @ 5 MHz)	675
I.R.(Megohms MIN)	5000

MECHANICAL	
Interface Dimensions	
SEE TYCO ELECTRONICS CATALOG	
Mating Characteristics:	
Insertion (MAX Lbs)	3
Withdrawal (MIN Oz)	0.5
Force to Engage (Lbs MAX)	3
& Disengage (Lbs MAX)	1.5
Center Contact Captivation	
Axial (Lbs)	4
Cable Retention	
Axial Force (Lbs MIN)	30
Torque (In/Oz MIN)	16

ENVIRONMENTAL
TEMPERATURE RATING −65° TO +105°C
Vibration MIL-STD-202, Method 204, Condition D
Shock MIL-STD-202, Method 213, Condition I
Thermal Shock MIL-STD-202, Method 107, Condition B
Moisture Resistance MIL-STD-202, Method 106
Corrosion − MIL-STD-202, Method 101, Condition B

COMPONENT	MATERIAL	FINISH
OUTER HOUSING FLAT WASHER	STAINLESS STEEL PER ASTM-A484 AND ASTM-A582, TYPE 303	PASSIVATE PER ASTM-A380
INNER HOUSING	STAINLESS STEEL PER ASTM-A484 AND ASTM-A582,TYPE 303	GOLD PLATE PER MIL-G-45204 OVER NICKEL PLATE PER QQ-N-290
DIELECTRIC	TFE FLUOROCARBON PER ASTM-D-1457	N/A
CENTER CONTACT	BERYLLIUM COPPER PER ASTM B 196, ALLOY C17300, CONDITION H	GOLD PLATE PER MIL-G-45204 OVER COPPER PLATE PER MIL-C-14550
CONTACT SLEEVE	BERYLLIUM COPPER PER ASTM B 196, ALLOY C17300, CONDITION H	GOLD PLATE PER MIL-G-45204 OVER NICKEL PLATE PER QQ-N-290
SPRING	STAINLESS STEEL	PASSIVATED
RETAINING RING	STAINLESS STEEL	PASSIVATED
CONTACT RING	BERYLLIUM COPPER PER ASTM B 194, ALLOY C17200, CONDITION H	GOLD PLATE PER MIL-G-45204 OVER COPPER PLATE PER MIL-C-14550

THIS DRAWING IS A CONTROLLED DOCUMENT.

DIMENSIONS: INCHES/mm (REF)

TOLERANCES UNLESS OTHERWISE SPECIFIED:

0 PLC	± −
1 PLC	± −
2 PLC	± −
3 PLC	± .005 (0.13)
4 PLC	± −
ANGLES	± 1°

MATERIAL: SEE TABLE

FINISH: SEE TABLE

DWN	P. VACCARO	8-10-85
CHK	J. HAVENER	13AUG03
APVD	J. HAVENER	13AUG03
PRODUCT SPEC	408-8293	
APPLICATION SPEC	—	
WEIGHT	—	

tyco Electronics

Tyco Electronics Corporation
Harrisburg, PA 17105-3608

NAME: OSSP 2 HOLE FLANGE MOUNT FLOATING CABLE JACK − DIRECT SOLDER ATTACHMENT (4706-7985-02)

SIZE	CAGE CODE	DRAWING NO	RESTRICTED TO
A3	00779	C-1059868-1	—

CUSTOMER DRAWING | SCALE 4:1 | SHEET 1 OF 1 | REV B

AMP 1470-19 REV 31MAR2000

H:\ECs\dmmod\