THIS DRAWING IS UNPUBLISHED. RELEASED FOR PUBLICATION -.- .
© COPYRIGHT - BY TYCO ELECTRONICS CORPORATION. ALL RIGHTS RESERVED.

LOC	DIST
AD	00

REVISIONS

P	LTR	DESCRIPTION	DATE	DWN	APVD
	L	EC 0G3C 0175 05	08NOV05	BSV	JLG

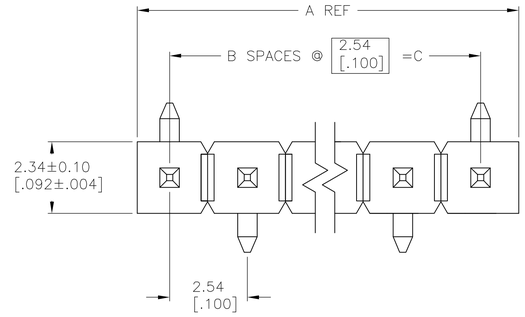

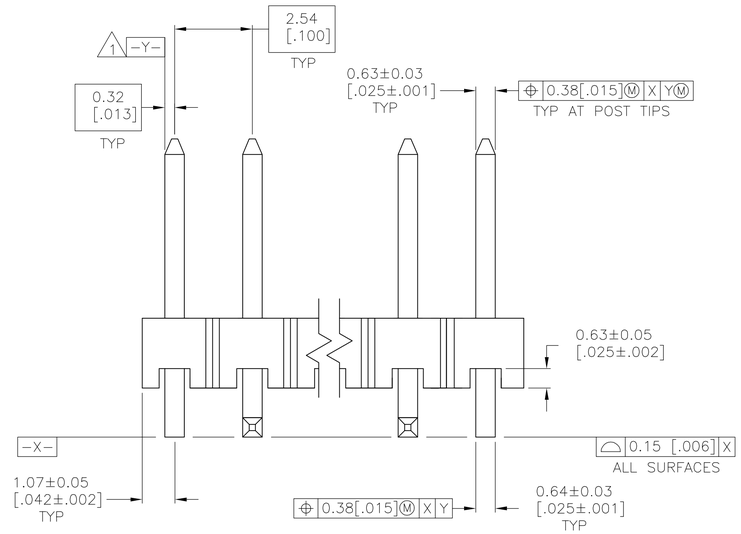

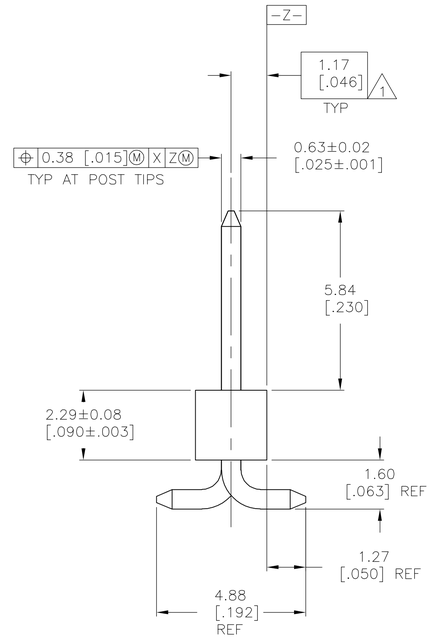

1. THE NOTED DIMENSIONS APPLY AT THE INTERSECTION OF THE POST AND THE HOUSING
2. 0.00254[.000100]–0.00508[.000200] MATTE TIN–LEAD OVER 0.00127[.000050] NICKEL ENTIRE POST
3. HOUSING: LCP, COLOR–BLACK
   POSTS: PHOSPHOR BRONZE
4. 0.00254[.000100]–0.00508[.000200] BRIGHT TIN OVER 0.00127[.000050] NICKEL ENTIRE POST.
5. PRELIMINARY PART – NOT RELEASED FOR PRODUCTION.
6. 0.00254[.000100]–0.00508[.000200] MATTE TIN OVER 0.00127[.000050] NICKEL ENTIRE POST

	6	35.56 [1.400]	14	37.69 [1.484]	15	6–146132–3
	6	33.02 [1.300]	13	35.15 [1.384]	14	6–146132–2
	6	30.48 [1.200]	12	32.61 [1.284]	13	6–146132–1
	6	27.94 [1.100]	11	30.07 [1.184]	12	6–146132–0
	6	25.40 [1.000]	10	27.53 [1.084]	11	5–146132–9
	6	22.86 [.900]	9	24.99 [.984]	10	5–146132–8
	6	20.32 [.800]	8	22.45 [.884]	9	5–146132–7
	6	17.78 [.700]	7	19.91 [.784]	8	5–146132–6
	6	15.24 [.600]	6	17.37 [.684]	7	5–146132–5
	6	12.70 [.500]	5	14.83 [.584]	6	5–146132–4
	6	10.16 [.400]	4	12.29 [.484]	5	5–146132–3
	6	7.62 [.300]	3	9.75 [.384]	4	5–146132–2
	6	5.08 [.200]	2	7.21 [.284]	3	5–146132–1
5	4	15.24 [.600]	6	17.37 [.684]	7	1–146132–5
	2	35.56 [1.400]	14	37.69 [1.484]	15	1–146132–3
	2	33.02 [1.300]	13	35.15 [1.384]	14	1–146132–2
	2	30.48 [1.200]	12	32.61 [1.284]	13	1–146132–1
	2	27.94 [1.100]	11	30.07 [1.184]	12	1–146132–0
	2	25.40 [1.000]	10	27.53 [1.084]	11	146132–9
	2	22.86 [.900]	9	24.99 [.984]	10	146132–8
	2	20.32 [.800]	8	22.45 [.884]	9	146132–7
	2	17.78 [.700]	7	19.91 [.784]	8	146132–6
	2	15.24 [.600]	6	17.37 [.684]	7	146132–5
	2	12.70 [.500]	5	14.83 [.584]	6	146132–4
	2	10.16 [.400]	4	12.29 [.484]	5	146132–3
	2	7.62 [.300]	3	9.75 [.384]	4	146132–2
	2	5.08 [.200]	2	7.21 [.284]	3	146132–1
	PLATING	C	B	A	NO. OF POSN.	PART NUMBER

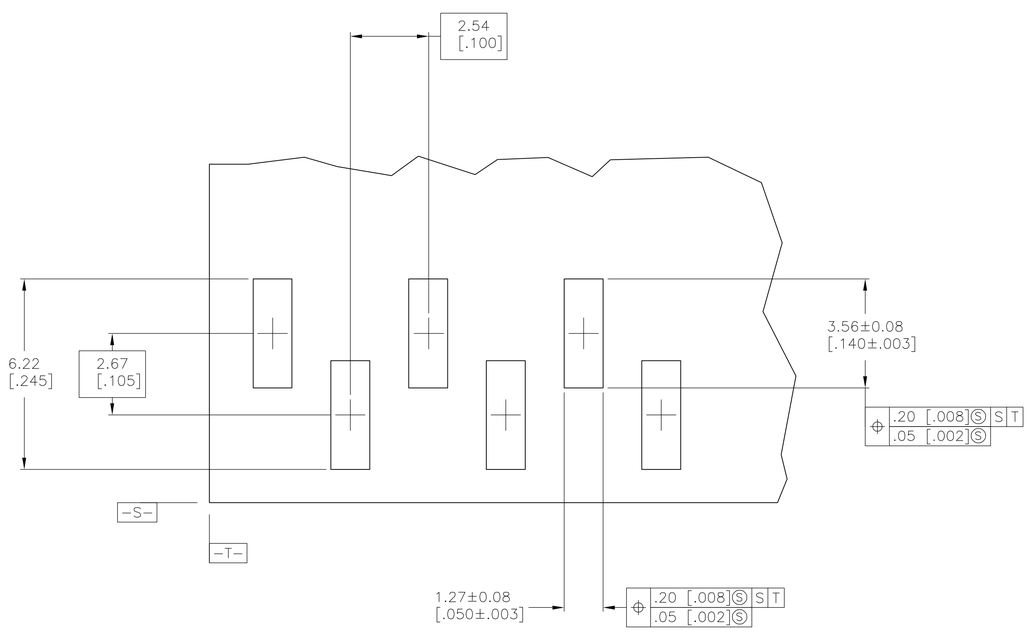

RECOMMENDED PCB LAYOUT
FOR USE WITH .008 THICK STENCIL

THIS DRAWING IS A CONTROLLED DOCUMENT.

DIMENSIONS: mm [INCHES]

TOLERANCES UNLESS OTHERWISE SPECIFIED:
0 PLC ± –
1 PLC ± –
2 PLC ± –
3 PLC ± –
4 PLC ± –
ANGLES ± 0° 30'

MATERIAL 3

FINISH SEE TABLE

DWN J. KNOUB 09SEP94
CHK G. DUBNICZKI 09SEP94
APVD G. DUBNICZKI 09SEP94

PRODUCT SPEC –

APPLICATION SPEC –

WEIGHT –

tyco Electronics
Tyco Electronics Corporation
Harrisburg, Pa 17105–3608

NAME
SURFACE MOUNT HEADER ASSEMBLY, MOD II, BREAKAWAY, VERTICAL, SINGLE ROW, .100 C/L, .025 SQ. POST

SIZE	CAGE CODE	DRAWING NO	RESTRICTED TO
A1	00779	C-146132	–

CUSTOMER DRAWING | SCALE 10:1 | SHEET 1 OF 1 | REV L