THIS DRAWING IS UNPUBLISHED. RELEASED FOR PUBLICATION -,- .
© COPYRIGHT - BY TYCO ELECTRONICS CORPORATION. ALL RIGHTS RESERVED.

LOC	DIST
FT	0

REVISIONS

P	LTR	DESCRIPTION	DATE	DWN	APVD
	D	REVISED PER ECO-07-010286	5/2/07	SS	MS

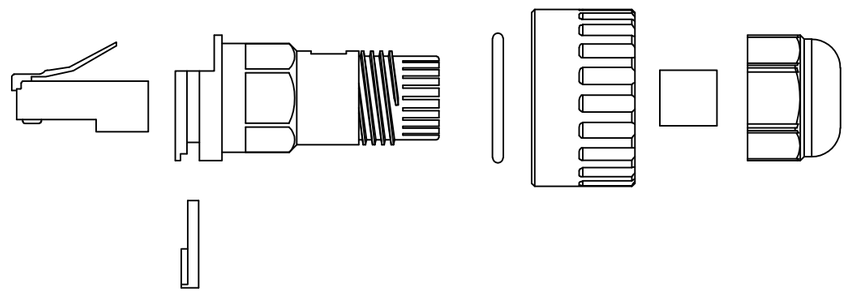

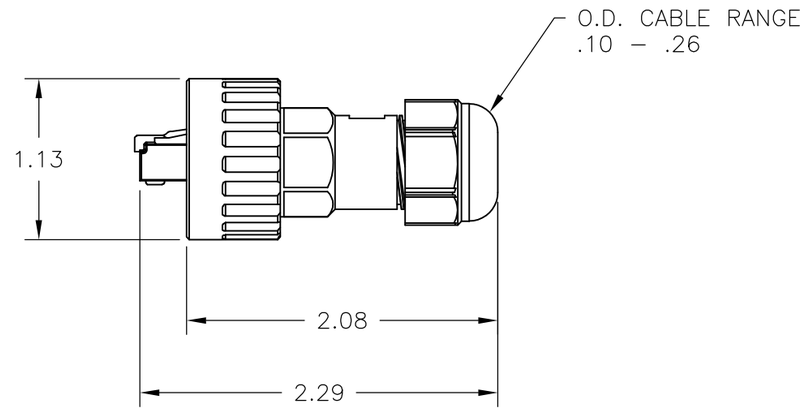

1546440-1
PART NO.

THIS DRAWING IS A CONTROLLED DOCUMENT.

DIMENSIONS: INCHES

TOLERANCES UNLESS OTHERWISE SPECIFIED:

0 PLC	± -
1 PLC	± -
2 PLC	± .02
3 PLC	± .005
4 PLC	± -
ANGLES	± 2°

MATERIAL: -

FINISH: -

DWN S SCHLEGEL 10/29/02
CHK H WAKEEM 10/29/02
APVD H WAKEEM 10/29/02
PRODUCT SPEC —
APPLICATION SPEC —
WEIGHT —

tyco Electronics
Tyco Electronics Corporation
Harrisburg, PA 17105-3608

NAME
FIELD ATTACHABLE RJ-45 CONNECTOR
2.5-6.5MM ACCEPTABLE CABLE DIAMETER
—

SIZE	CAGE CODE	DRAWING NO	RESTRICTED TO
A3	00779	C-1546440	—

CUSTOMER DRAWING

SCALE	SHEET	REV
NTS	1 OF 1	D