THIS DRAWING IS UNPUBLISHED. RELEASED FOR PUBLICATION - ,- .
© COPYRIGHT - BY TYCO ELECTRONICS CORPORATION. ALL INTERNATIONAL RIGHTS RESERVED.

LOC	DIST
GP	00

REVISIONS

P	LTR	DESCRIPTION	DATE	DWN	APVD
	C	REVISED PER ECO-08-006704	07APR08	JDP	CWR

ELECTRICAL PROPERTIES	
CURRENT RATING	1 AMP
INSULATION RESISTANCE	>5 x 10^9 OHMS @ 500 VDC
DWV	>1000 VRMS AT SEA LEVEL
ENVIRONMENTAL PROPERTIES	
TEMPERATURE RATING	-55°C TO 125°C

1. 20 POSITION ASSEMBLY SHOWN.
2. HOUSING AND COVER: GLASS REINFORCED POLYESTER, UL94V-0 RATED, COLOR BLUE. CONTACTS: BERYLLIUM COPPER.
3. CONTACTS: 0.00254[.000100] MIN TIN OVER 0.00127[.000050] MIN NICKEL.
4. NOTCHES MAY OR MAY NOT BE PRESENT ALONG EDGES OF COVER OR HOUSING.

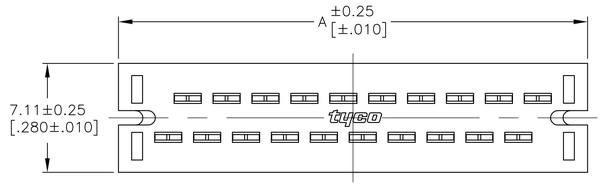

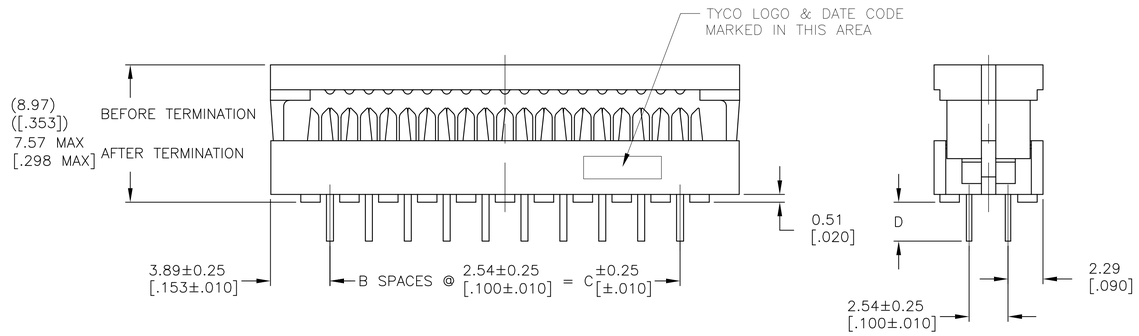

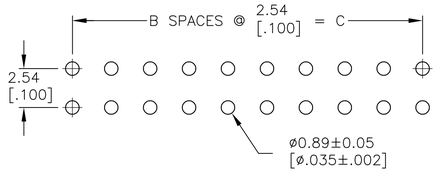

PC BOARD DIMENSIONS
(20 POSITION SHOWN)

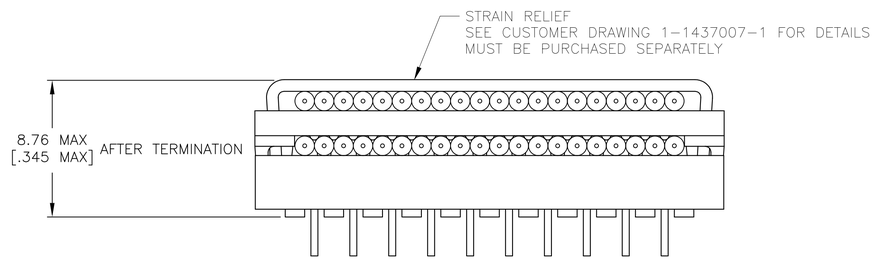

OPTIONAL STRAIN RELIEF ATTACHED

	D	C	B	A	NUMBER OF POSITIONS	T&B PART NO (REF)	TE PART NUMBER
	3.96 [.156]	5.08 [.200]	2	12.85 [.506]	6	622-0663LF	1-1658525-7
	2.54 [.100]	78.74 [3.100]	31	86.51 [3.406]	64	622-6453LF	1-1658525-6
	2.54 [.100]	73.66 [2.900]	29	81.43 [3.206]	60	622-6053LF	1-1658525-5
OBSOLETE	2.54 [.100]	53.34 [2.100]	21	61.11 [2.406]	44	622-4453LF	1-1658525-4
	2.54 [.100]	48.26 [1.900]	19	56.03 [2.206]	40	622-4053LF	1-1658525-3
	2.54 [.100]	43.18 [1.700]	17	50.95 [2.006]	36	622-3653LF	1-1658525-2
OBSOLETE	2.54 [.100]	35.56 [1.400]	14	43.33 [1.706]	30	622-3053LF	1-1658525-1
	2.54 [.100]	27.94 [1.100]	11	35.71 [1.406]	24	622-2453LF	1-1658525-0
	2.54 [.100]	22.86 [.900]	9	30.63 [1.206]	20	622-2053LF	1658525-9
	2.54 [.100]	17.78 [.700]	7	25.55 [1.006]	16	622-1653LF	1658525-8
	2.54 [.100]	15.24 [.600]	6	23.01 [.906]	14	622-1453LF	1658525-7
	2.54 [.100]	10.16 [.400]	4	17.93 [.706]	10	622-1053LF	1658525-6
	2.54 [.100]	7.62 [.300]	3	15.39 [.606]	8	622-0853LF	1658525-5
	2.54 [.100]	5.08 [.200]	2	12.85 [506]	6	622-0653LF	1658525-4
	2.54 [.100]	73.66 [2.900]	24	68.73 [2.706]	50	622-5053LF	1658525-3
	2.54 [.100]	40.64 [1.600]	16	48.41 [1.906]	34	622-3453LF	1658525-2
	2.54 [.100]	30.48 [1.200]	12	38.25 [1.506]	26	622-2653LF	1658525-1

THIS DRAWING IS A CONTROLLED DOCUMENT.

DIMENSIONS: INCHES

TOLERANCES UNLESS OTHERWISE SPECIFIED:
0 PLC ± -
1 PLC ± -
2 PLC ± 0.13[.005]
3 PLC ± -
4 PLC ± -
ANGLES ± -

MATERIAL 2 FINISH 3

DWN J.GERACE 08FEB06
CHK C.ROHDE 08FEB06
APVD M.WALMSLEY 08FEB06
PRODUCT SPEC —
APPLICATION SPEC —
WEIGHT —

Tyco Electronics
Tyco Electronics Corporation
Harrisburg, PA 17105-3608

NAME CONNECTOR, SLIMLINE PCB (STANDARD), LEAD FREE
—

SIZE A1 | CAGE CODE 00779 | DRAWING NO C-1658525 | RESTRICTED TO —

CUSTOMER DRAWING | SCALE 5:1 | SHEET 1 OF 1 | REV C