THIS DRAWING IS UNPUBLISHED. RELEASED FOR PUBLICATION – , – .
© COPYRIGHT – BY TYCO ELECTRONICS CORPORATION. ALL INTERNATIONAL RIGHTS RESERVED.

LOC	DIST
—	—

REVISIONS

P	LTR	DESCRIPTION	DATE	DWN	APVD
	L	REV PER ECO 08-024900	10-21-08	CT	KT

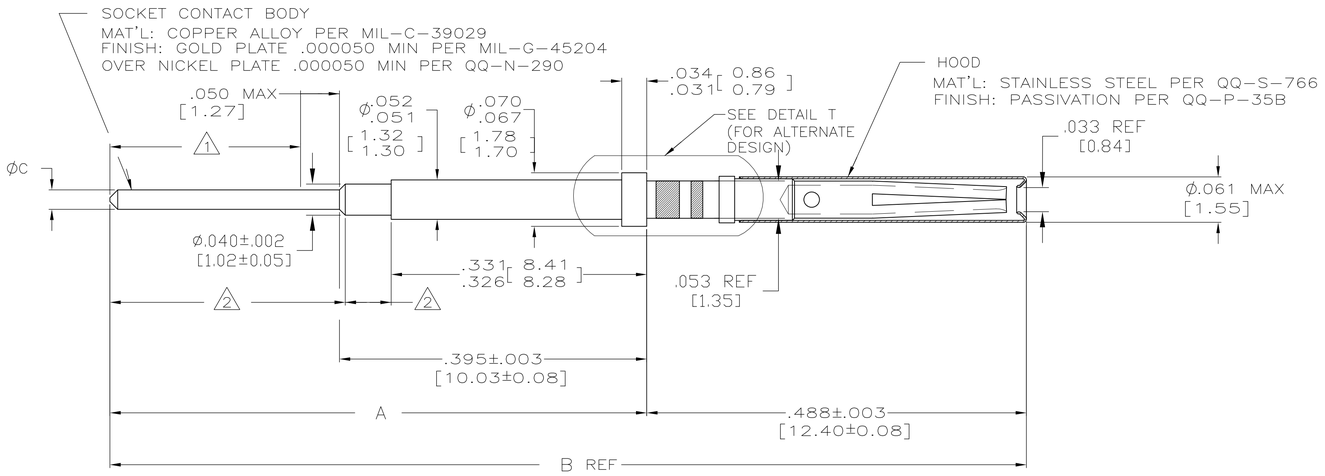

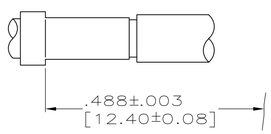

DETAIL T
ALTERNATE DESIGN

	.375 [9.53]	.024–.026 [0.61–0.66]	1.299 [32.99]	.756 [19.20]	1–211431–8
1	.500 [12.70]	.024–.026 [0.61–0.66]	1.424 [36.17]	.926 [23.52]	1–211431–6
1	.250 [6.35]	.024–.026 [0.61–0.66]	1.174 [29.82]	.676 [17.17]	1–211431–5
2	.375 [9.53]	.024–.026 [0.61–0.66]	1.299 [32.99]	.801 [20.35]	1–211431–4
1	.150 [3.81]	.024–.030 [0.61–0.76]	1.074 [27.28]	.576 [14.63]	1–211431–3
– –	.155 [3.94]	.018–.021 [0.46–0.53]	1.064 [27.03]	.576 [14.63]	1–211431–0
– –	.500 [12.70]	.024–.026 [0.61–0.66]	1.424 [36.17]	.926 [23.52]	211431–8
– –	.375 [9.53]	.024–.026 [0.61–0.66]	1.299 [32.99]	.801 [20.35]	211431–6
– –	.250 [6.35]	.024–.026 [0.61–0.66]	1.174 [29.82]	.676 [17.17]	211431–4
– –	.150 [3.81]	.024–.026 [0.61–0.66]	1.074 [27.28]	.576 [14.63]	211431–2
REMARKS	MIN EXTENSION BEYOND INSERT	DIM C	DIM B	DIM A	PART NUMBER

1. THIS AREA SOLDER COATED WITH SN60 OR SN63 SOLDER TO WITHIN .050 [1.27] OF CHAMFER, .000060 [0.0015] MIN THICKNESS. (1–211431–3 & 1–211431–5 & 1–211431–6 ONLY. DIMENSIONS SHOWN APPLY BEFORE SOLDER COATING.

2. THIS AREA SOLDER COATED WITH SN60 OR SN63 SOLDER .000080 [0.0020 MIN THK. SOLDER PERMISSIBLE ON LARGE DIAMETER AS SHOWN. (1–211431–4 ONLY) DIMENSIONS SHOWN APPLY BEFORE SOLDER COATING.

THIS DRAWING IS A CONTROLLED DOCUMENT.

DIMENSIONS: INCHES [mm]

TOLERANCES UNLESS OTHERWISE SPECIFIED:
0 PLC ± –
1 PLC ± –
2 PLC ± –
3 PLC ± .005 [0.13]
4 PLC ± –
ANGLES ± –

MATERIAL: SEE CALLOUTS
FINISH: SEE CALLOUTS

DWN P.YEAGER 3-28-91
CHK A.SHARPE 3-30-91
APVD A.SHARPE 3-30-91
PRODUCT SPEC —
APPLICATION SPEC —
WEIGHT —

Tyco Electronics
Tyco Electronics Corporation
Harrisburg, PA 17105-3608

NAME: POSTED SOCKET CONTACT ASSY, NIC 600,ROUND,SIZE 22, FRONT RELEASE

SIZE A1 | CAGE CODE 00779 | DRAWING NO C-211431 | RESTRICTED TO —

CUSTOMER DRAWING | SCALE 10:1 | SHEET 1 OF 1 | REV L

4805 (1/08)