THIS DRAWING IS UNPUBLISHED. RELEASED FOR PUBLICATION -, .
© COPYRIGHT BY TYCO ELECTRONICS CORPORATION. ALL RIGHTS RESERVED.

LOC	DIST
CM	00

REVISIONS

P	LTR	DESCRIPTION	DATE	DWN	APVD
	AD	REVISED PER ECO-08-017241	15JUL08	HMR	DB

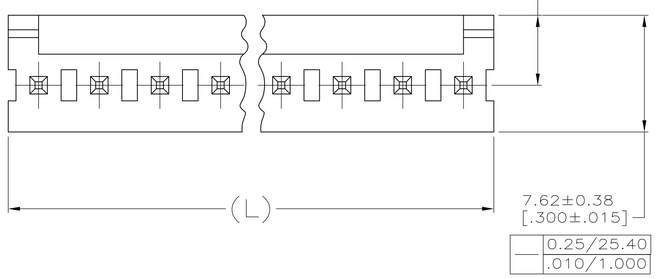

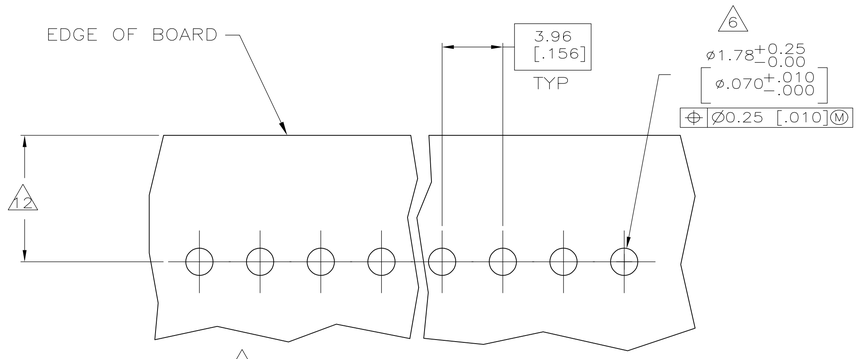

1. POST TO WITHSTAND 13 NEWTONS (3 LBS) MINIMUM AXIAL FORCE IN BOTH DIRECTIONS SHOWN WITHOUT DISLODGING.
2. TOLERANCES APPLY TO SOLDER SIDE OF BOARD.
3. MEASURED AT SURFACE —A—
4. PLASTIC FLASH PERMITTED IN THIS AREA.
5. PARTS COMPLY WITH AMP SOLDERABILITY SPEC. NO. 109-11-2.
6. ONE HOLE MAY BE UNDERSIZED 1.65/1.52 [.065/.060] DIA. FOR ASSEMBLY RETENTION DURING WAVE SOLDERING.
7. MATERIAL: HEADER—THERMOPLASTIC POLYESTER GLASS-FILLED 94V-0 (NATURAL)
   POST—COPPER ALLOY (SEE NOTES 13 & 14 FOR PLATING)
8. COORDINATE DIMENSION APPLIES FROM CENTER OF ACTUAL FEATURE.
9. PLASTIC BURRS CAUSED BY CUT-OFF TOOLING ARE PERMITTED WITHIN THE MAXIMUM TOLERANCE ENVELOPE.
10. POST TO BE MEASURED WHEN STRIP IS HELD FLAT.
11. POST MUST WITHSTAND TWO 90° BENDS AGAINST EXTRUSION WITHOUT BREAKING.
12. DIMENSION SHOULD BE 4.45 [.175] MIN WHEN MATING WITH A MTA-156 CONNECTOR ASSEMBLY OR A SL-156 CONNECTOR ASSEMBLY.
13. PLATING: GOLD PLATE AREA, 0.00038 [.000015] MINIMUM, ALL SIDES, OVER NICKEL UNDERPLATE, 0.00127 [.000050] MINIMUM, ALL SIDES AND ENTIRE LENGTH OF POST.
14. PLATING: BRIGHT TIN/LEAD (93/7) PLATE AREA, 0.00381-0.00889 [.000150-.000350] THICK, ALL FOUR SIDES 3.18 [.125] MINIMUM FOR -2 THRU -24. MATTE TIN PLATE AREA 0.00381-0.00889 [.000150-.000350] THICK ALL FOUR SIDES, 3.18 [.125] FOR -32 THRU -54.

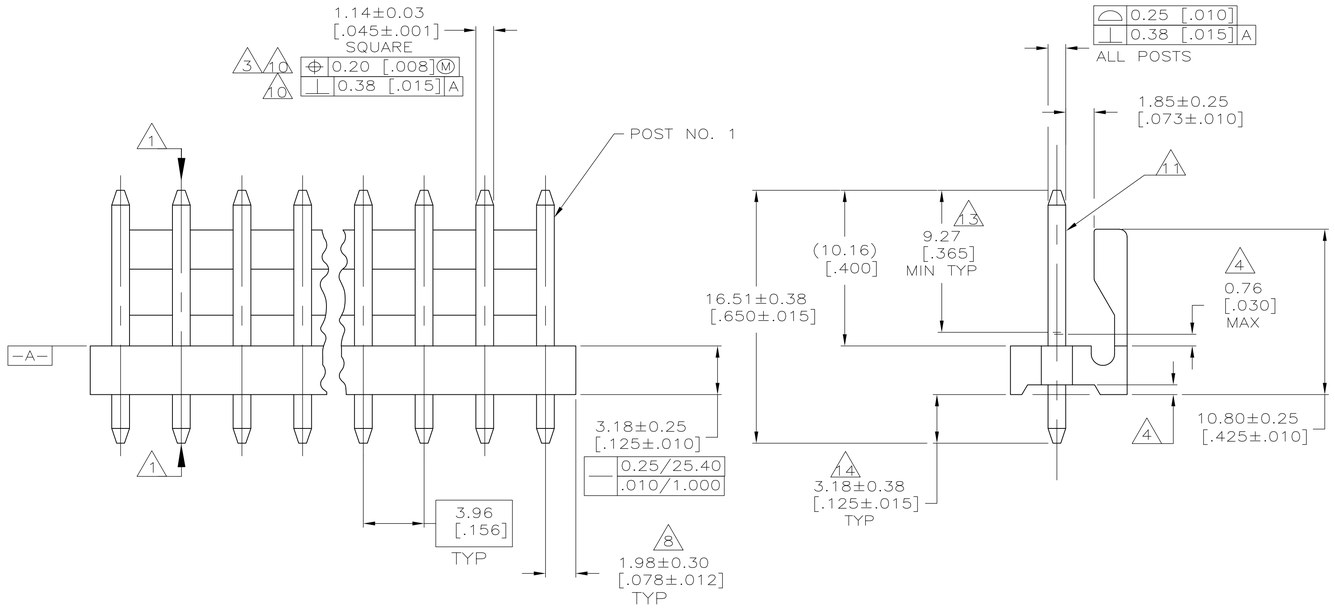

LEAD FREE			
	95.10 [3.744]	24	5-641119-4
	91.14 [3.588]	23	5-641119-3
	87.17 [3.432]	22	5-641119-2
	83.21 [3.276]	21	5-641119-1
	79.25 [3.120]	20	5-641119-0
	75.29 [2.964]	19	4-641119-9
	71.32 [2.808]	18	4-641119-8
	67.36 [2.652]	17	4-641119-7
	63.40 [2.496]	16	4-641119-6
	59.44 [2.340]	15	4-641119-5
	55.47 [2.184]	14	4-641119-4
	51.51 [2.028]	13	4-641119-3
	47.55 [1.872]	12	4-641119-2
	43.59 [1.716]	11	4-641119-1
	39.62 [1.560]	10	4-641119-0
	35.66 [1.404]	9	3-641119-9
	31.70 [1.248]	8	3-641119-8
	27.74 [1.092]	7	3-641119-7
	23.77 [.936]	6	3-641119-6
	19.81 [.780]	5	3-641119-5
	15.85 [.624]	4	3-641119-4
	11.89 [.468]	3	3-641119-3
	7.92 [.312]	2	3-641119-2
	DIM (L)	NO.OF POSN	ASSEMBLY

CONTAINS LEAD			
	95.10 [3.744]	24	2-641119-4
	91.14 [3.588]	23	2-641119-3
	87.17 [3.432]	22	2-641119-2
	83.21 [3.276]	21	2-641119-1
	79.25 [3.120]	20	2-641119-0
	75.29 [2.964]	19	1-641119-9
	71.32 [2.808]	18	1-641119-8
	67.36 [2.652]	17	1-641119-7
	63.40 [2.496]	16	1-641119-6
	59.44 [2.340]	15	1-641119-5
	55.47 [2.184]	14	1-641119-4
	51.51 [2.028]	13	1-641119-3
	47.55 [1.872]	12	1-641119-2
	43.59 [1.716]	11	1-641119-1
	39.62 [1.560]	10	1-641119-0
	35.66 [1.404]	9	641119-9
	31.70 [1.248]	8	641119-8
	27.74 [1.092]	7	641119-7
	23.77 [.936]	6	641119-6
	19.81 [.780]	5	641119-5
	15.85 [.624]	4	641119-4
	11.89 [.468]	3	641119-3
	7.92 [.312]	2	641119-2
	DIM (L)	NO.OF POSN	ASSEMBLY

METRIC

THIS DRAWING IS A CONTROLLED DOCUMENT.

DIMENSIONS: mm [INCHES]

TOLERANCES UNLESS OTHERWISE SPECIFIED:
0 PLC ±
1 PLC ±
2 PLC ± 0.13 [.005]
3 PLC ±
4 PLC ±
ANGLES ±

MATERIAL 7 FINISH 7

DWN S. HOOVER 07-NOV-2002
CHK D. BOSSI 07-NOV-2002
APVD D. BOSSI 07-NOV-2002

Tyco Electronics — Tyco Electronics Corporation, Harrisburg, PA 17105-3608

NAME: MTA-.156 HEADER ASSEMBLY, FRICTION LOCK, STRAIGHT, .045 SQUARE POST, .000015 GOLD

PRODUCT SPEC
APPLICATION SPEC
WEIGHT

SIZE	CAGE CODE	DRAWING NO	RESTRICTED TO
A1	00779	C-641119	—

CUSTOMER DRAWING | SCALE 5:1 | SHEET 1 OF 1 | REV AD