THIS DRAWING IS UNPUBLISHED. RELEASED FOR PUBLICATION ,19 .
© COPYRIGHT 19 BY AMP INCORPORATED. ALL RIGHTS RESERVED.

LOC	DIST
DY	-

REVISIONS

P	LTR	DESCRIPTION	DATE	DWN	APVD
	C1	REVISED ECR-09-001260	19JAN09	LYM	LSF

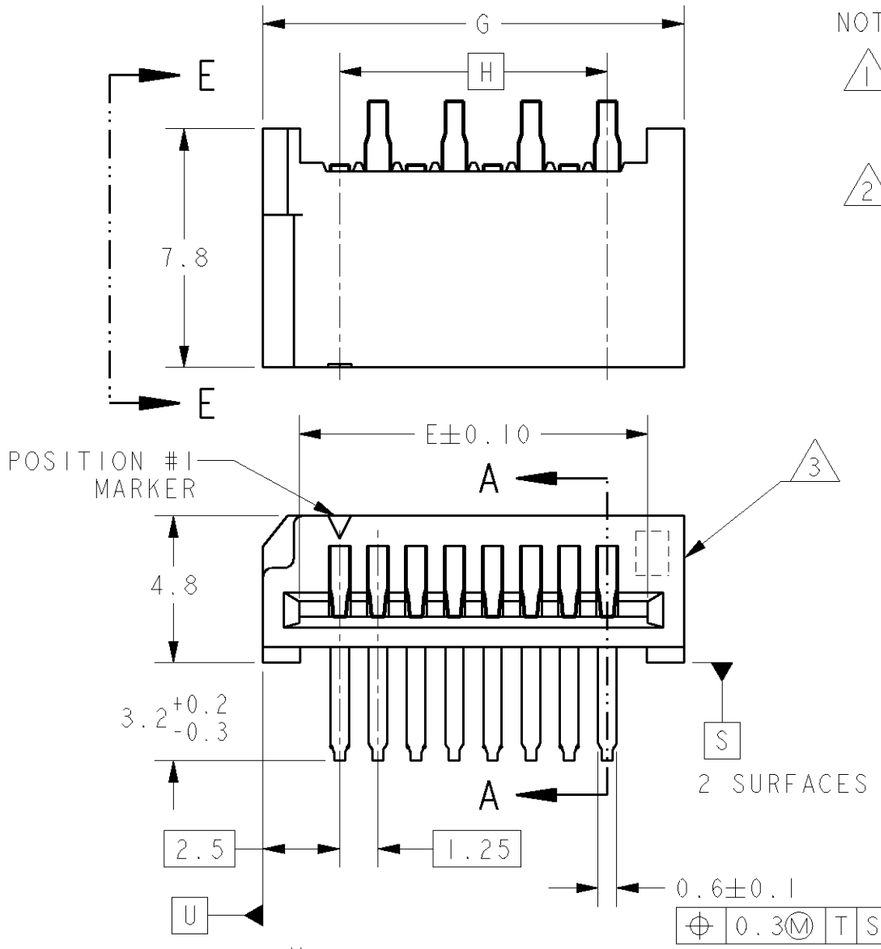

NOTES:

1. MATERIAL:
   HOUSING: GLASS FILLED PBT
   CONTACT: POST PLATED TIN PHOSPHOR BRONZE
2. INDICATION OF NUMBER OF POSITION

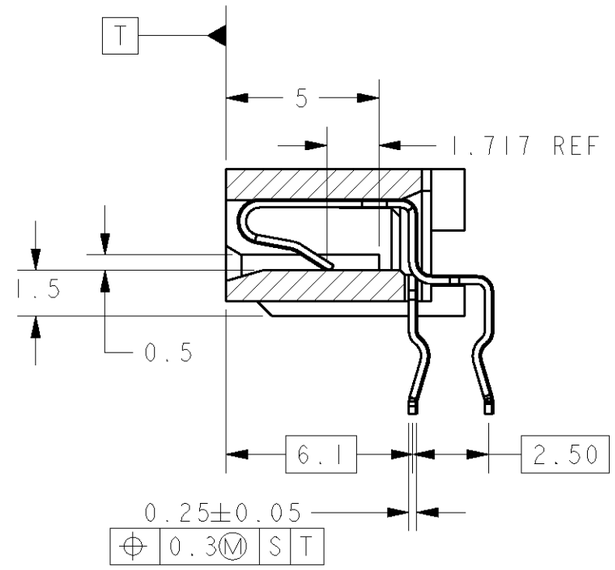

SECTION A-A

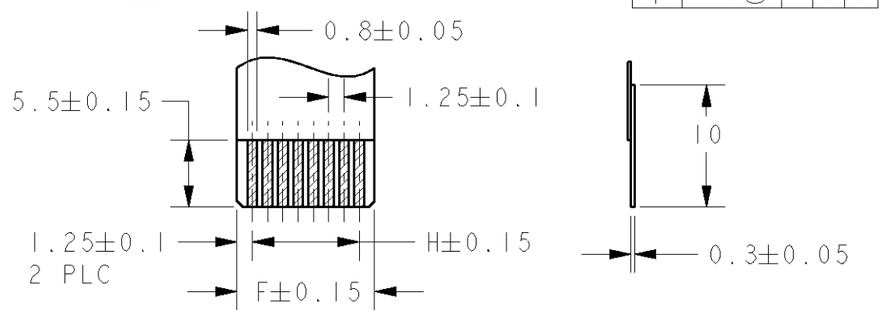

RECOMMENDED FFC

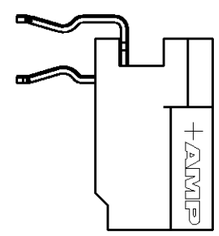

SECTION E-E
SCALE 4:1

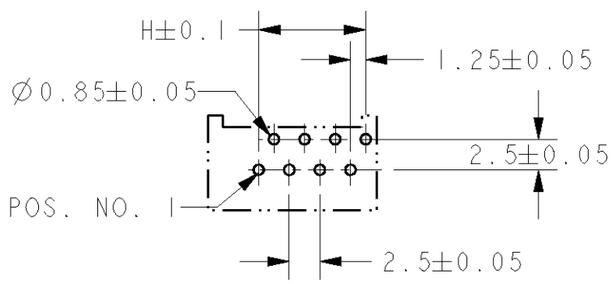

RECOMMENDED PCB LAYOUT

COLOR	H	G	F	E	POS.	PART NO.
BLACK	17.50	22.50	20.00	20.15	15	5-84533-5
NATURAL	48.75	53.75	51.25	51.40	40	4-84533-0
	47.50	52.50	50.00	50.15	39	△ -9
	46.25	51.25	48.75	48.90	38	-8
	45.00	50.00	47.50	47.65	37	-7
	43.75	48.75	46.25	46.40	36	-6
	42.50	47.50	45.00	45.15	35	-5
	41.25	46.25	43.75	43.90	34	-4
	40.00	45.00	42.50	42.65	33	-3
	38.75	43.75	41.25	41.40	32	-2
	37.50	42.50	40.00	40.15	31	-1
	36.25	41.25	38.75	38.90	30	3-84533-0
	35.00	40.00	37.50	37.65	29	△ -9
	33.75	38.75	36.25	36.40	28	-8
	32.50	37.50	35.00	35.15	27	-7
	31.25	36.25	33.75	33.90	26	-6
	30.00	35.00	32.50	32.65	25	-5
	28.75	33.75	31.25	31.40	24	-4
	27.50	32.50	30.00	30.15	23	-3
	26.25	31.25	28.75	28.90	22	-2
	25.00	30.00	27.50	27.65	21	-1
	23.75	28.75	26.25	26.40	20	2-84533-0
	22.50	27.50	25.00	25.15	19	△ -9
	21.25	26.25	23.75	23.90	18	-8
	20.00	25.00	22.50	22.65	17	-7
	18.75	23.75	21.25	21.40	16	-6
	17.50	22.50	20.00	20.15	15	-5
	16.25	21.25	18.75	18.90	14	-4
	15.00	20.00	17.50	17.65	13	-3
	13.75	18.75	16.25	16.40	12	-2
	12.50	17.50	15.00	15.15	11	-1
	11.25	16.25	13.75	13.90	10	1-84533-0
	10.00	15.00	12.50	12.65	9	△ -9
	8.75	13.75	11.25	11.40	8	-8
	7.50	12.50	10.00	10.15	7	-7
	6.25	11.25	8.75	8.90	6	-6
	5.00	10.00	7.50	7.65	5	-5
	3.75	8.75	6.25	6.40	4	0-84533-4

THIS DRAWING IS A CONTROLLED DOCUMENT FOR AMP INCORPORATED. IT IS SUBJECT TO CHANGE AND THE CONTROLLING ENGINEERING ORGANIZATION SHOULD BE CONTACTED FOR THE LATEST REVISION.

DIMENSIONS: mm

TOLERANCES UNLESS OTHERWISE SPECIFIED:

0 PLC	±0.2
1 PLC	±0.25
2 PLC	±0.25
3 PLC	±-
4 PLC	±-
ANGLES	±3°

MATERIAL 1 | FINISH 1

DWN 18NOV97 WYLEE
CHK BO KOK
APVD WL CHOO
PRODUCT SPEC 108-51021
APPLICATION SPEC -
WEIGHT -

CUSTOMER DRAWING

Tyco Electronics — Tyco Electronics Corporation Singapore

NAME: ASSY, 1.25mm FFC CONN, HORIZONTAL (LEAD FREE)

SIZE	CAGE CODE	DRAWING NO
A3	00779	C-84533

SCALE 5:1 | SHEET 1 OF 1 | REV C1

AMP 1470-19 REV 09MAY94

Pro/ENGINEER DRAWING