THIS DRAWING IS UNPUBLISHED. RELEASED FOR PUBLICATION 2006
© COPYRIGHT 2006 BY TYCO ELECTRONICS CORPORATION. ALL RIGHTS RESERVED.

LOC	DIST
J	-

REVISIONS

P	LTR	DESCRIPTION	DATE	DWN	APVD
	A	RELEASED	18JAN2006	K.S	M.K
	B	REVISED	26DEC2008	T.K	M.K
	C	REVISED	13FEB2009	T.K	M.K

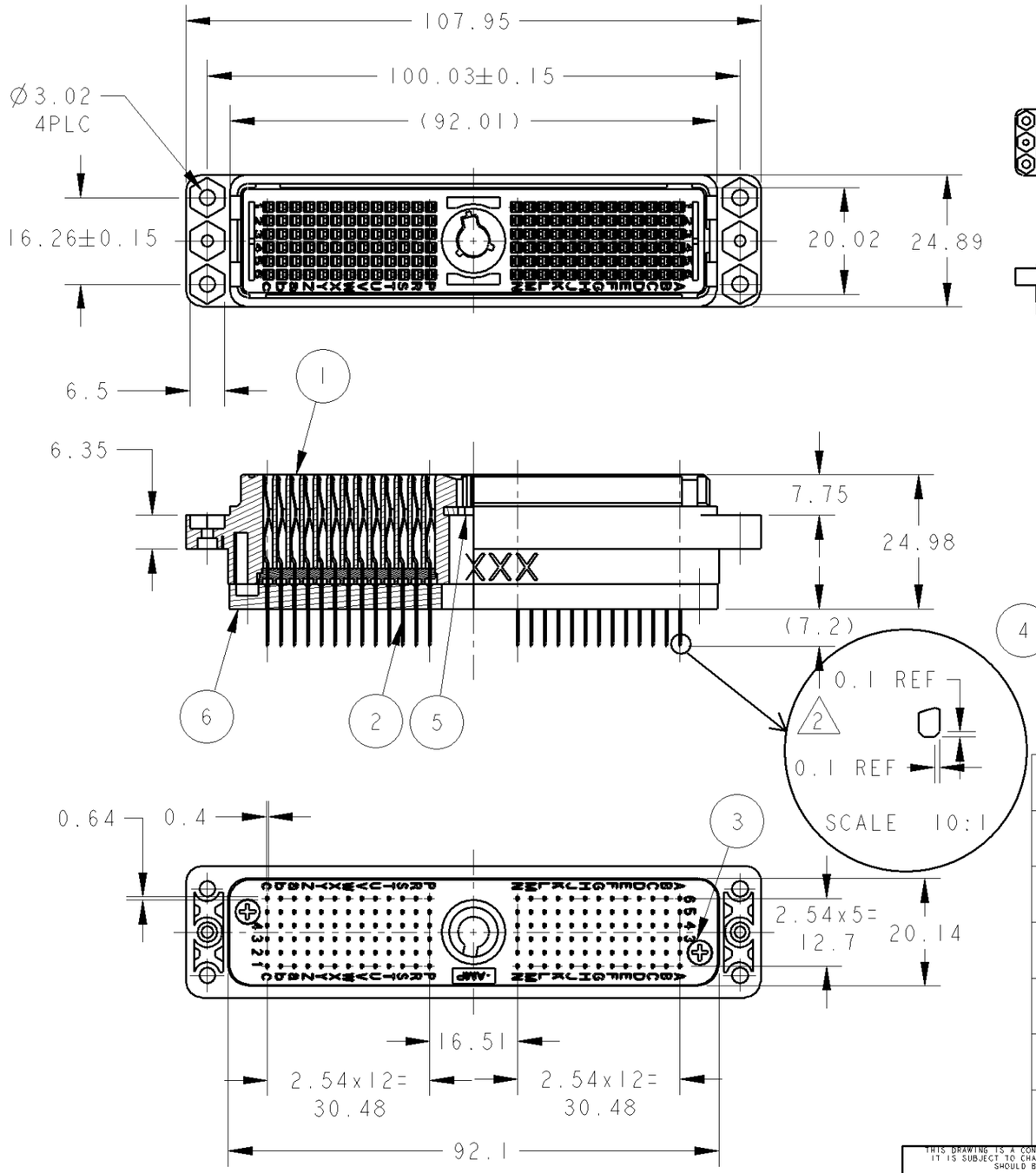

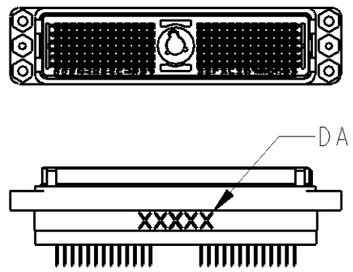

SCALE 1:2

-1;AS SHOWN
本図

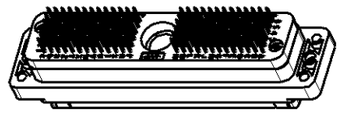

SCALE 1:2

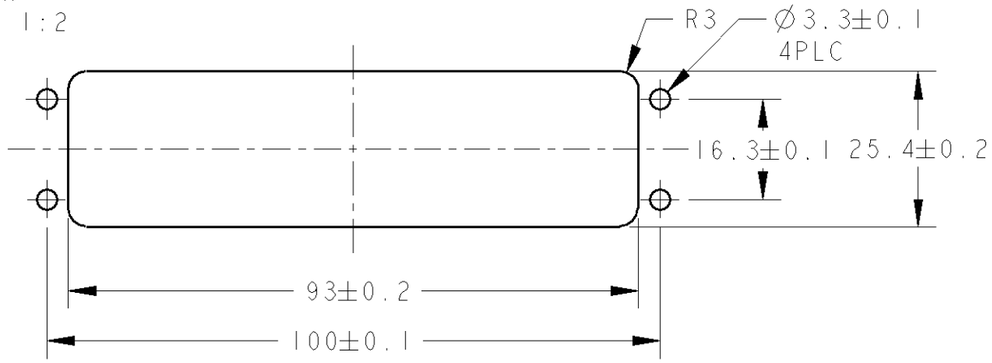

RECOMMENDED PANEL HOLE PATTERN
推奨パネル取付寸法

RoHS COMPLIANT

符号 ITEM	名前 DESCRIPTION	数量 QTY	材質 MATERIAL	仕上げ FINISH	備考 REMARK
6	アダプタスタビライザ ADAPTER STABILIZER	1	合成樹脂 PLASTIC	無し NONE	UL94V-0
5	メタルプレート METAL PLATE	(1)	ステンレス鋼 STAINLESS STEEL	無し NONE	
4	サポートハウジング SUPPORT HOUSING	12	合成樹脂 PLASTIC	無し NONE	UL94V-0
3	タッピングスクリュー TAPPING SCREW L=8	2	鋼 STEEL	3価クロメート TRIVALENT CHROMATE	
2	コンタクト 0.64x0.4 CONTACT	(156)	ベリリウム銅 BERYLLIUM COPPER	ニッケル下地金メッキ Au OVER Ni PL.	
1	ハウジングリセアッシー HOUSING RECE ASSY	1	ナイロン樹脂 NYLON RESIN	無し NONE	UL94V-0

1. PLATING: MATING AREA; 1.27μmMIN GOLD OVER 1.27μmMIN NICKEL
   SOLDER LEG AREA; GOLD FLASH OVER 1.27μmMIN NICKEL
   OTHERS; 1.27μmMIN NICKEL
2. TIP OF CONTACT.
   THE VOLUME OF SHIPMENTS :MAX 4000PCS IN MAR, 2009

1. めっき：接触部：ニッケル下地1.27μmMINの上に金1.27μmMIN
   半田付部：ニッケル下地1.27μmMINの上に金フラッシュ
   その他：ニッケル1.27μmMIN
2. コンタクトの先端形状。出荷台数：2009年3月から最大4000個

THIS DRAWING IS A CONTROLLED DOCUMENT FOR TYCO ELECTRONICS CORPORATION. IT IS SUBJECT TO CHANGE AND THE CONTROLLING ENGINEERING ORGANIZATION SHOULD BE CONTACTED FOR THE LATEST REVISION.

DIMENSIONS: mm

TOLERANCES UNLESS OTHERWISE SPECIFIED: ±0.3
0 PLC ±
1 PLC ±
2 PLC ±
3 PLC ±
4 PLC ±
ANGLES ±3°

MATERIAL SEE TABLE
FINISH SEE TABLE

DWN K.SAKAI 18JAN2006
CHK E.TAKEMASA 18JAN2006
APVD M.KIMURA 18JAN2006
PRODUCT SPEC 108-5483
APPLICATION SPEC -
WEIGHT 80g

Tyco Electronics
Tyco Electronics Corporation
Kawasaki, Japan

NAME
M-ZIF CONN RECE
156P SHORT SOLDER TYPE

SIZE	CAGE CODE	DRAWING NO	RESTRICTED TO
A3	-	C-5353177	-

CUSTOMER DRAWING
SCALE 1:1 SHEET 1 OF 1 REV C