P/N	APPLICABLE NOTES	(Ø A)	INTERFACE
-1CCSF	1,2,3	.085	DETENT
-2CCSF	1,2,3	.088	SMOOTH BORE

REVISIONS

ZONE	REV	DESCRIPTION	DATE	BY
–	D	ECO 11796	07/07/00	IMG
–	E	ECO 12464	11/01/00	IMG
–	F	ECO 16062	08.28.03	ATV

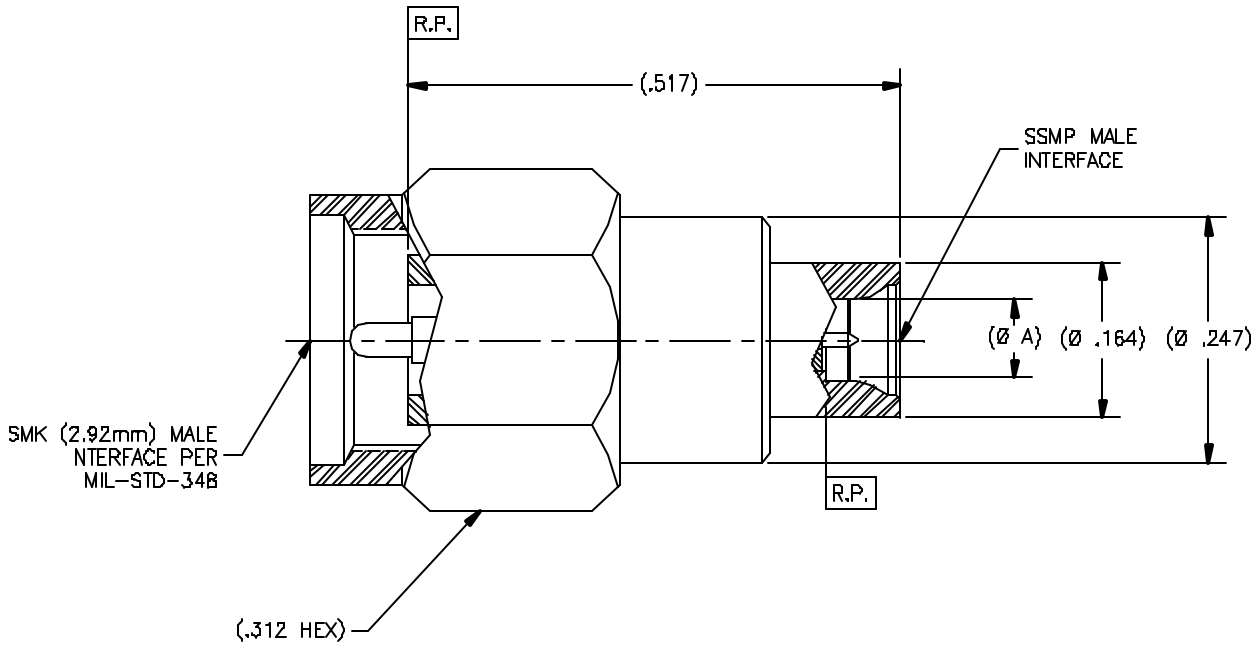

DRAWING NO. P124 REV. F

NOTE(S):

1. MATERIAL(S):
   - 1.1 BODY, INSERT & COUPLING NUT: 303 SST PER ASTM A-582
   - 1.2 CONTACT: BeCu ALLOY PER ASTM B-196
   - 1.3 INSULATOR: PTFE PER ASTM D-1710
   - 1.4 BEAD: POLYMETHYLPENTENE (PMP)
2. FINISHE(S):
   - 2.1 BODY, INSERT & COUPLING NUT: PASSIVATE PER ASTM A-967
   - 2.2 CONTACT: GOLD PLATE PER ASTM B-488 OVER NICKEL PLATE PER AMS-QQ-N-290.
   - 2.3 INSULATOR: NONE
3. ELECTRICAL PERFORMANCE:
   - 3.1 FREQUENCY: DC-40 GHz
   - 3.2 R.F. INSERTION LOSS: 0.5dB MAX TO 40 GHz
   - 3.3 VSWR: 1.5:1 MAX TO 40 GHz

APPLICABLE TENSOLITE DOCUMENTS

WORK STD	PROD INST	ASSY INST
NA	NA	NA

NOTICE
THIS DRAWING INCLUDES A CONFIDENTIAL, PROPRIETARY DESIGN GENERATED BY TENSOLITE COMPANY AND ALL DESIGN, MANUFACTURING REPRODUCTION, USE AND SALE RIGHTS REGARDING THE SAME ARE EXPRESSLY RESERVED. IT IS SUBMITTED UNDER A CONFIDENTIAL RELATIONSHIP FOR A SPECIFIED PURPOSE AND THE RECIPIENT AGREES BY ACCEPTING THE DRAWING NOT TO SUPPLY OR DISCLOSE ANY INFORMATION REGARDING IT TO ANY UNAUTHORIZED PERSON TO INCORPORATE IN OTHER PRODUCTS ANY SPECIAL FEATURES PECULIAR TO THIS DESIGN. ALL PATENT RIGHTS HERETO ARE EXPRESSLY RESERVED BY TENSOLITE COMPANY, LONG BEACH, CALIFORNIA 90815.

TOLERANCES AND NOTES
EXCEPT AS NOTED
DIMENSIONS ARE IN INCHES
LINEAR .XX ±.010 .XXX ±.005 ANGULAR ± 1/2°
FRACTION ± 1/32
1. MACHINE FINISH 63 RMS
2. BREAK ALL SHARP EDGES .003 MAX.
3. MACHINED FILLETS .005 MAX.
4. MACHINED SURFACES SQUARE TO RESPECTIVE AXIS WITHIN .005 INCHES PER INCH.
5. MACHINED DIAMETERS CONCENTRIC WITHIN .001 T.I.R.
6. DIMENSIONS TO BE MET BEFORE PLATING.
7. CHAMFER ALL THREADS 45°.
8. THREADS PER H-28.
9. REMOVE FRAYED EDGES ON TEFLON.
10. REMOVE ALL BURRS.

SEE NOTES	–	SEE NOTES	–
MATERIAL	SIZE	FINISH	PROCUREMENT

NEXT ASSY

APPROVAL	INITIALS	DATE
DRAWN BY	ATV	11/18/98
CHECKED		
QUALITY		
ENGINEERING	DN	09/04/03

Tensolite
HIGH PERFORMANCE CABLES & INTERCONNECT SYSTEMS
Long Beach, California 90815

TITLE: SSMP MALE STRAIGHT TO SMK (2.92mm) MALE ADAPTER

SCALE 10:1 | SUB-DIRECTORY/FILENAME OLPXXX\OLP124 | SHEET 1 OF 1

SIZE C | CODE IDENT 30990 | DRAWING NO. P124 | REV. F