P/N	APPLICABLE NOTE(S)
-1CC	1,2,3
-1CCSF	1,2,3

REVISIONS

ZONE	REV	DESCRIPTION	DATE	BY
–	E	ECO 12921	02.05.01	P.MAO
–	F	ECO 13239	04.27.01	AGS
–	G	ECO 15418	03.20.03	DKN

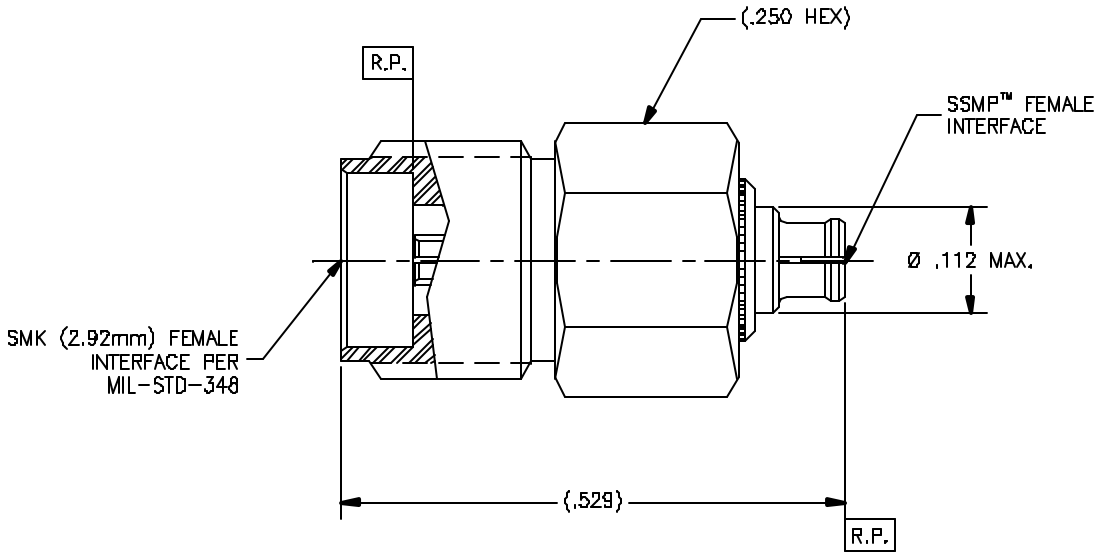

DRAWING NO. P125 REV. G

NOTE(S):

1. MATERIAL(S):
   - 1.1 BODY: 303 SST PER ASTM A-582.
   - 1.2 INSERT & CONTACT: BeCu ALLOY PER ASTM B-196.
   - 1.3 INSULATOR: PTFE PER ASTM D-1710 & ASTM D-1457.
   - 1.4 BEAD: POLYMETHYLPENTENE (PMP).
2. FINISH(ES):
   - 2.1 BODY (FOR -1CC): GOLD PLATE PER ASTM B-488 OVER NICKEL PLATE PER AMS-QQ-N-290.
     (FOR -1CCSF): PASSIVATE PER ASTM A-967
   - 2.2 INSERT & CONTACT: GOLD PLATE PER ASTM B-488 OVER NICKEL PLATE PER AMS-QQ-N-290.
   - 2.3 INSULATOR AND BEAD: NONE
3. ELECTRICAL PERFORMANCE(S):
   - 3.1 FREQUENCY: DC-40.0 GHz.
   - 3.2 R.F. INSERTION LOSS: 0.5dB MAX TO 40.0 GHz.
   - 3.3 VSWR: 1.5:1 MAX TO 40.0 GHz.

SSMP™ IS A REGISTERED TRADEMARK OF TENSOLITE COMPANY.

APPLICABLE TENSOLITE DOCUMENTS

WORK STD	PROD INST	ASSY INST
NA	NA	NA

NOTICE
THIS DRAWING INCORPORATES A CONFIDENTIAL, PROPRIETARY DESIGN GENERATED BY TENSOLITE COMPANY AND ALL DESIGN, MANUFACTURING REPRODUCTION, USE AND SALE RIGHTS REGARDING THE SAME ARE EXPRESSLY RESERVED. IT IS SUBMITTED UNDER A CONFIDENTIAL RELATIONSHIP FOR A SPECIFIC PURPOSE AND THE RECIPIENT AGREES BY ACCEPTING THIS DRAWING NOT TO SUPPLY OR DISCLOSE ANY INFORMATION REGARDING IT TO ANY UNAUTHORIZED PERSON TO INCORPORATE IN OTHER PRODUCTS ANY SPECIAL FEATURES PECULIAR TO THIS DESIGN. ALL PATENT RIGHTS HERETO ARE EXPRESSLY RESERVED BY TENSOLITE COMPANY, LONG BEACH, CALIFORNIA 90815.

TOLERANCES AND NOTES EXCEPT AS NOTED
DIMENSIONS ARE IN INCHES
LINEAR .XX ±.010 .XXX ±.005 ANGULAR ± 1/2°
FRACTION ± 1/32
1. MACHINE FINISH 63 RMS
2. BREAK ALL SHARP EDGES .003 MAX.
3. MACHINED FILLETS .005 MAX.
4. MACHINED SURFACES SQUARE TO RESPECTIVE AXIS WITHIN .005 INCHES PER INCH.
5. MACHINED DIAMETERS CONCENTRIC WITHIN .001 T.I.R.
6. DIMENSIONS TO BE MET BEFORE PLATING.
7. DRAW FOR ALL TAPERS 10°.
8. THREADS PER H-28.
9. REMOVE FRAYED EDGES ON TEFLON.
10. REMOVE ALL BURRS.

SEE NOTE(S)	–	SEE NOTE(S)	–
MATERIAL	SIZE	FINISH	PROCUREMENT

NEXT ASSY

APPROVAL INITIALS		DATE
DRAWN BY	ATV	11/17/98
CHECKED		
QUALITY		
ENGINEERING	TH	04/04/03

Tensolite HIGH PERFORMANCE CABLES & INTERCONNECT SYSTEMS Long Beach, California 90815

TITLE SSMP™ FEMALE STRAIGHT TO SMK (2.92mm) FEMALE ADAPTER

SCALE 10:1 SUB-DIRECTORY/FILENAME QLPXXX\QLP125 SHEET 1 OF 1

SIZE C CODE IDENT 30990 DRAWING NO. P125 REV. G