P/N	APPLICABLE NOTE(S)	INTERFACE	(Ø A)
-1CCSF	1,2,3	DETENT	.085/.084
-2CCSF	1,2,3	NON-DETENT	.088/.087

REVISIONS				
ZONE	REV	DESCRIPTION	DATE	BY
A4	A	ECO 9767 (ADD NOTES)	02.16.99	P.MAO
-	B	ECO 11797	07/07/00	IMG
-	C	ECO 12315	10/04/00	IMG

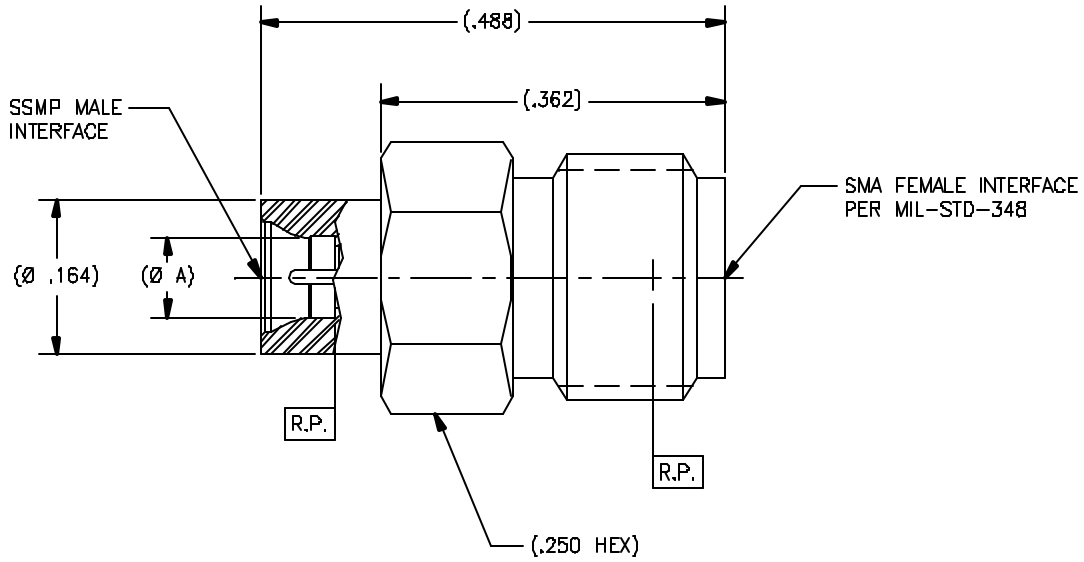

DRAWING NO.	REV.
P128	C

NOTE(S):

1. MATERIAL(S):
   - 1.1 BODY & INSERT: 303 SST PER ASTM A-582
   - 1.2 CONTACT: BeCu ALLOY PER ASTM B-196 OR ASTM B-197
   - 1.3 INSULATOR: PTFE PER ASTM D-1710
2. FINISHE(S):
   - 2.1 BODY & INSERT: PASSIVATE PER ASTM A-967
   - 2.2 CONTACT: GOLD PLATE PER ASTM B-488 OVER NICKEL PLATE PER QQ-N-290.
   - 2.3 INSULATOR: NONE
3. ELECTRICAL PERFORMANCE(S):
   - 3.1 FREQUENCY RANGE: DC-18GHz
   - 3.2 R.F. INSERTION LOSS: 0.25dB MAX TO 18GHz
   - 3.3 VSWR: 1.25:1 MAX TO 18GHz

NOTICE
THIS DRAWING INCORPORATES A CONFIDENTIAL, PROPRIETARY DESIGN GENERATED BY TENSOLITE COMPANY AND ALL DESIGN, MANUFACTURING REPRODUCTION, USE AND SALE RIGHTS REGARDING THE SAME ARE EXPRESSLY RESERVED. IT IS SUBMITTED UNDER A CONFIDENTIAL RELATIONSHIP FOR A SPECIFIED PURPOSE AND THE RECIPIENT AGREES BY ACCEPTING THE DRAWING NOT TO SUPPLY OR DISCLOSE ANY INFORMATION REGARDING IT TO ANY UNAUTHORIZED PERSON TO INCORPORATE IN OTHER PRODUCTS ANY SPECIAL FEATURES PECULIAR TO THIS DESIGN. ALL PATENT RIGHTS HERETO ARE EXPRESSLY RESERVED BY TENSOLITE COMPANY, LONG BEACH, CALIFORNIA 90815.

TOLERANCES AND NOTES EXCEPT AS NOTED
DIMENSIONS ARE IN INCHES
LINEAR .XX ±.010 .XXX ±.005 ANGULAR ± 1/2°
FRACTION ± 1/32
1. MACHINE FINISH 63 RMS
2. BREAK ALL SHARP EDGES .003 MAX.
3. MACHINED FILLETS .005 MAX.
4. MACHINED SURFACES SQUARE TO RESPECTIVE AXIS WITHIN .005 INCHES PER INCH.
5. MACHINED DIAMETERS CONCENTRIC WITHIN .001 T.I.R.
6. DIMENSIONS TO BE MET BEFORE PLATING.
7. CHAMFER ALL THREADS 45°.
8. THREADS PER H-28.
9. REMOVE FRAYED EDGES ON TEFLON.
10. REMOVE ALL BURRS.

MATERIAL	SIZE	FABRICATION	PROCUREMENT
-	-	-	-

NEXT ASSY

APPROVAL	INITIALS	DATE
DRAWN BY	DKN	11.19.98
CHECKED		
QUALITY		
ENGINEERING	ATV	10.05.00

Tensolite
HIGH PERFORMANCE CABLES & INTERCONNECT SYSTEMS
Long Beach, California 90815

TITLE: SSMP MALE STRAIGHT TO SMA FEMALE ADAPTER

SCALE: NONE
SUB-DIRECTORY/FILENAME: _CLPXX\CLP128
SHEET 1 OF 1

SIZE	CAGE CODE	DRAWING NO.	REV.
C	30990	P128	C