P/N	APPLICABLE NOTES	INTERFACE
-1CCSF	1,2,3	DETENT
-2CCSF	1,2,3	SMOOTH BORE

REVISIONS				
ZONE	REV	DESCRIPTION	DATE	BY
A4	A	ECO 9769 (ADD NOTES)	02.16.99	P.MAO
-	B	ECO 11798	07/07/00	IMG

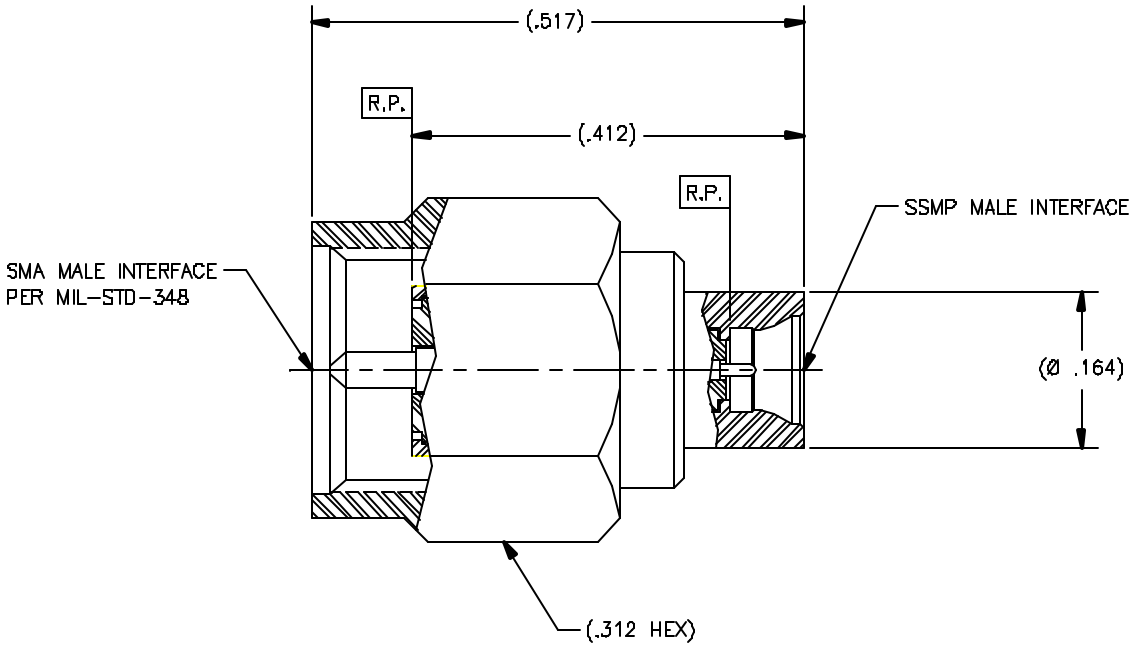

DRAWING NO.	REV.
P130	B

NOTE(S):

1. MATERIAL(S):
   - 1.1 BODY, INSERT & COUPLING NUT: 303 SST PER ASTM A-582
   - 1.2 CONTACT: BeCu ALLOY PER ASTM B-196 OR ASTM B-197
   - 1.3 INSULATOR: PTFE PER ASTM D-1710
2. FINISHE(S):
   - 2.1 BODY, INSERT & COUPLING NUT: PASSIVATE PER ASTM A-967
   - 2.2 CONTACT: GOLD PLATE PER ASTM B-488 OVER NICKEL PLATE PER QQ-N-290.
   - 2.3 INSULATOR: NONE
3. ELECTRICAL PERFORMANCE(S):
   - 3.1 FREQUENCY RANGE: DC-18GHz
   - 3.2 R.F. INSERTION LOSS: 0.15dB MAX TO 18GHz
   - 3.3 VSWR: 1.25:1 MAX TO 18GHz

NOTICE

THIS DRAWING EMBODIES A CONFIDENTIAL, PROPRIETARY DESIGN ORIGINATED BY TENSOLITE COMPANY AND ALL DESIGN, MANUFACTURING REPRODUCTION, USE AND SALE RIGHTS REGARDING THE SAME ARE EXPRESSLY RESERVED. IT IS SUBMITTED UNDER A CONFIDENTIAL RELATIONSHIP FOR A SPECIFIC PURPOSE AND THE RECIPIENT AGREES BY ACCEPTING THIS DRAWING NOT TO SUPPLY OR DISCLOSE ANY INFORMATION REGARDING IT TO ANY UNAUTHORIZED PERSON OR TO INCORPORATE IN OTHER PROJECTS ANY SPECIAL FEATURES POPULAR TO THIS DESIGN. ALL PATENT RIGHTS HEREIN ARE EXPRESSLY RESERVED BY TENSOLITE COMPANY, LONG BEACH, CALIFORNIA 90815

TOLERANCES AND NOTES
EXCEPT AS NOTED

DIMENSIONS ARE IN INCHES.
LINEAR .XX ±.010 .XXX ±.005 ANGULAR ± 1/2°
FRACTION ± 1/32

1. MACHINE FINISH 63 RMS
2. BREAK ALL SHARP EDGES .003 MAX.
3. MACHINED FILLETS .005 MAX.
4. MACHINED SURFACES SQUARE TO RESPECTIVE AXIS WITHIN .005 INCHES PER INCH.
5. MACHINED DIAMETERS CONCENTRIC WITHIN .002 T.I.R.
6. DIMENSIONS TO BE MET BEFORE PLATING.
7. CHAMFER ALL THREADS 45°.
8. THREADS PER H-28.
9. REMOVE FRAYED EDGES ON TEFLON.
10. REMOVE ALL BURRS.

MATERIAL	SIZE	SPECIFICATION	PROCUREMENT
-	-	-	-

NEXT ASSY

APPROVAL INITIALS		DATE
DRAWN BY	DKN	11.19.98
CHECKED		
QUALITY		
ENGINEERING	ATV	07.20.00

Tensolite RF/Microwave Connectors
Long Beach, California 90815

TITLE: SSMP MALE STRAIGHT TO SMA MALE ADAPTER

SCALE: NONE | SUB-DIRECTORY\FILENAME: _CLPXX\CLP130 | SHEET 1 OF 1

SIZE: C | CAGE CODE: 30990 | DRAWING NO.: P130 | REV.: B