P/N	APPLICABLE NOTE(S)	(Ø A)	INTERFACE	Ø B CABLE
−1CCSF	1,2,3	.088	SMOOTH BORE	.086
−2CCSF	1,2,3	.085	DETENT	.086
−3CCSF	1,2,3	.088	SMOOTH BORE	.047
−4CCSF	1,2,3	.085	DETENT	.047

REVISIONS				
ZONE	REV	DESCRIPTION	DATE	BY
–	C	ECO 13644	09.21.01	AGS
–	D	ECO 17287 (−3CC & −4CC)	08.11.04	JF
–	E	ECO 20470	08.17.07	DKN

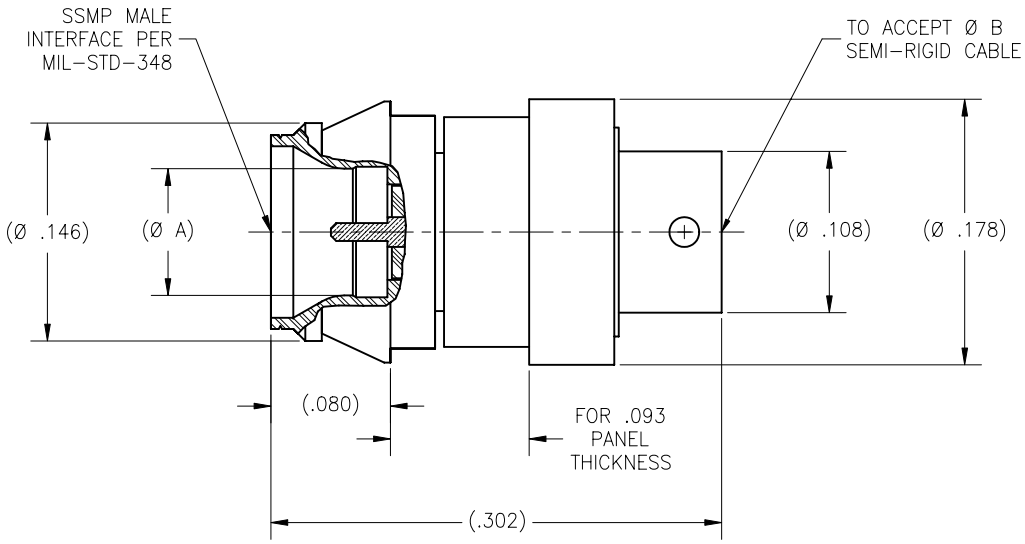

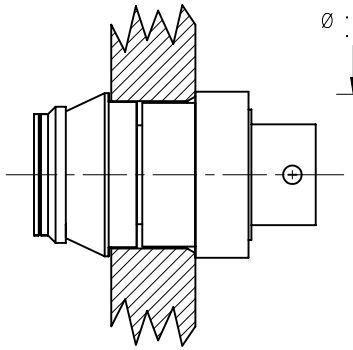

INSTALLED VIEW
SCALE: NONE

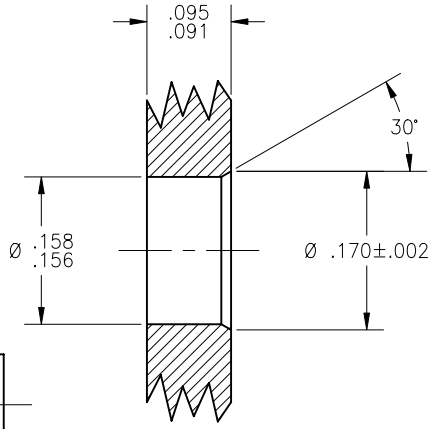

MOUNTING PANEL
SCALE: NONE

DRAWING NO.	REV.
P155	E

MATERIAL:

Body:
303 sst per ASTM A−582.
Insert & Center Conductor:
BeCu alloy C173 per ASTM B−196.
Snap Ring:
BeCu alloy C173 per ASTM B−196.
Insulator:
PTFE per ASTM D−1710.

ELECTRICAL:

Impedance: 50 Ohms nominal.
Frequency Range: DC to 26.5 GHz.
VSWR: 1.15:1 max to 18 GHz
1.25:1 max 18 − 26.5 GHz
Insertion Loss: .10 dB max to 18 GHz
.20 dB max 18 − 26.5 GHz

MECHANICAL:

Force To Engage & Disengage:
Engage: 2.5 pounds max.
Disengage: 1.5 pounds min.
Connector Durability:
Depend on Detent

ENVIRONMENTAL:

Temperature Range: −65°C to +165°C.
Thermal Shock:
Mil−Std−202, Method 107, Test Cond. B.
Moisture Resistance:
Mil−Std−202, Method 106, except step 7b shall be omitted. Insulation resistance at least 1000 MegOhms within 5 minutes after removal from humidity.
Corrosion:
Mil−Std−202, Method 101, Test Cond. B.
Vibration: **
Mil−Std−202, Method 204, Test Cond. B
Shock: **
Mil−Std−202, Method 213, Test Cond. B

** FOR DETENT ONLY

FINISH:

Body:
Passivate per ASTM A−967.
Insert & Center Conductor:
Gold plate per ASTM B−488, over nickel under plate per AMS−QQ−N−290.
Snap−Ring:
Nickel plate per AMS−QQ−N−290.

APPLICABLE TENSOLITE DOCUMENTS

WORK STD	PROD INST	ASSY INST
NA	NA	NA

NOTICE

THIS DRAWING EMBODIES A CONFIDENTIAL PROPRIETARY DESIGN ORIGINATED BY TENSOLITE COMPANY AND ALL DESIGN, MANUFACTURING REPRODUCTION, USE AND SALE RIGHTS REGARDING THE SAME ARE EXPRESSLY RESERVED. IT IS SUBMITTED UNDER A CONFIDENTIAL RELATIONSHIP FOR A SPECIFIED PURPOSE AND THE RECIPIENT AGREES BY ACCEPTING THIS DRAWING NOT TO SUPPLY OR DISCLOSE ANY INFORMATION REGARDING IT TO ANY UNAUTHORIZED PERSON TO INCORPORATE IN OTHER PROJECTS ANY SPECIAL FEATURES PECULIAR TO THIS DESIGN. ALL PATENT RIGHTS HERETO ARE EXPRESSLY RESERVED BY TENSOLITE COMPANY, LONG BEACH, CALIFORNIA 90815.

TOLERANCES AND NOTES EXCEPT AS NOTED

DIMENSIONS ARE IN INCHES.
LINEAR .XX ±.015 ANGULAR ± 1/2°
.XXX ±.005
FRACTION ± 1/32

1. MACHINE FINISH: 63 RMS
2. BREAK ALL SHARP EDGES .003 MAX.
3. MACHINED FILLETS .005 MAX.
4. MACHINED SURFACES SQUARE TO RESPECTIVE AXIS WITHIN .005 INCHES PER INCH.
5. MACHINED DIAMETERS CONCENTRIC WITHIN .002 T.I.R.
6. DIMENSIONS TO BE MET BEFORE PLATING.
7. CHAMFER ALL THREADS 45°.
8. THREADS PER H−28
9. REMOVE FRAYED EDGES ON TEFLON.
10. REMOVE ALL BURRS.

–	–	–	–
MATERIAL	SIZE	SPECIFICATION	PROCUREMENT

APPROVAL INITIALS		DATE
DRAWN BY	AGS	12.19.00
CHECKED BY		
TEST ENGG		
QUALITY		
DESIGN ENGG	ATV	08.20.07
MFG ENGG		

Tensolite
HIGH PERFORMANCE CABLES & INTERCONNECT SYSTEMS
Long Beach, California 90815

TITLE
SSMP MALE STRAIGHT SNAP−IN
PANEL MOUNT TO SEMI−RIGID CABLE

SCALE	SUB−DIRECTORY\FILENAME	SHEET
16:1	_OLP\	1 OF 1

SIZE	CAGE CODE	DRAWING NO.	REV.
C	30990	P155	E

ENG−DWG REV. B