P/N	INTERFACE(S)	(Ø A)
-1CCSF	DETENT	.0840/.0850
-2CCSF	NON-DETENT	.0870/.0880

REVISIONS				
ZONE	REV	DESCRIPTION	DATE	BY
–	A	ECO 13423	06.22.01	AGS
–	B	ECO 14678	07.12.02	AGS

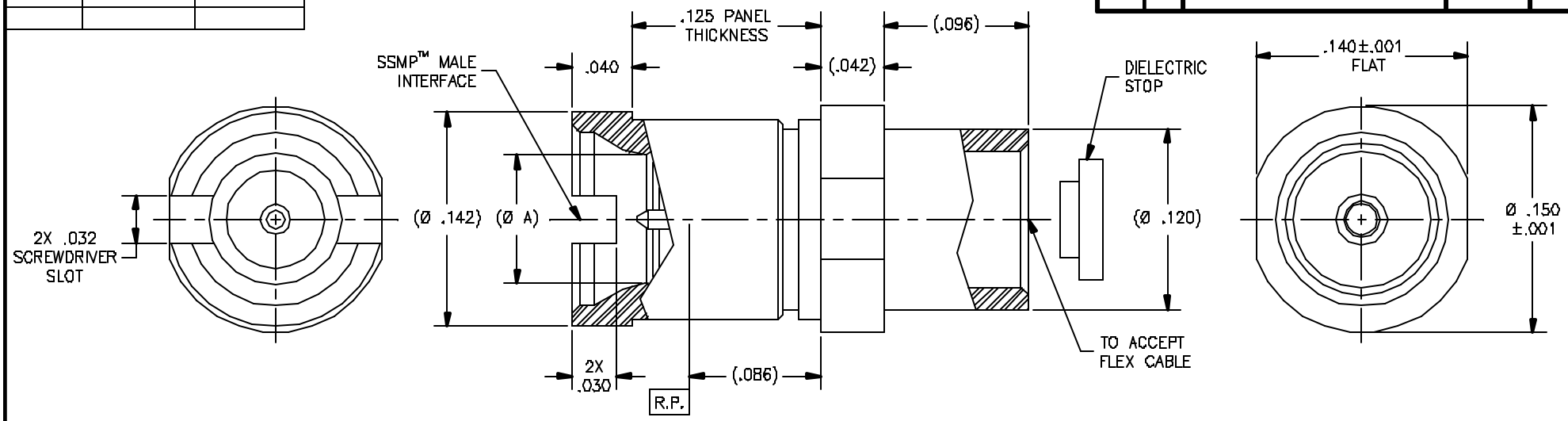

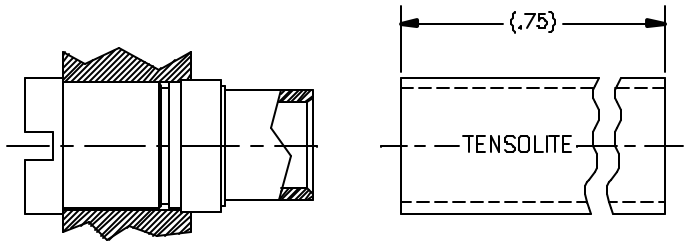

CONNECTOR INSTALLED VIEW

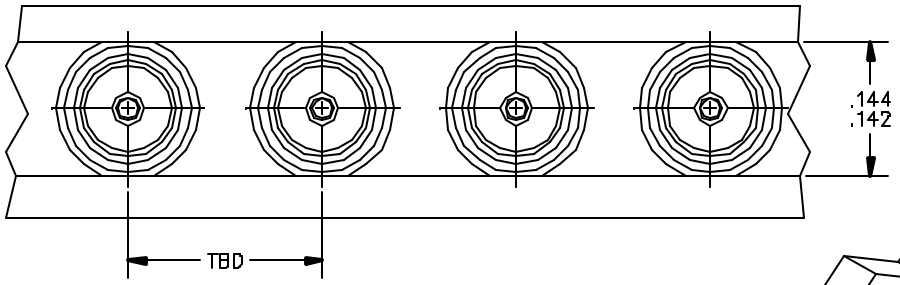

DRAWING NO.	REV.
P156	B

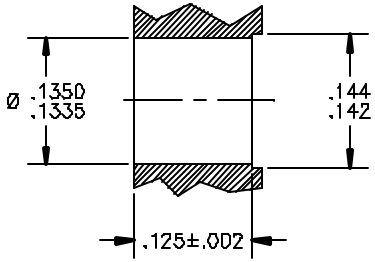

RECOMMENDED MOUNTING HOLE

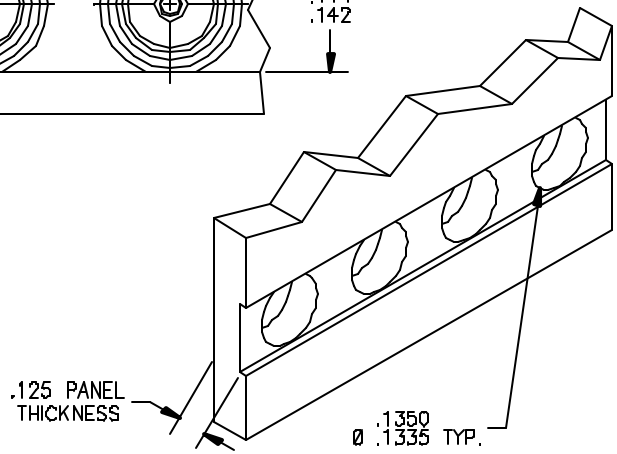

NOTE(S):

1. MATERIAL(S):
   - 1.1 BODY & SHROUD: 303 SST PER ASTM A 582.
   - 1.2 CENTER CONDUCTOR: BeCu ALLOY PER ASTM B-196
   - 1.3 INSULATOR: TEFLON PER ASTM D-1710
   - 1.4 DIELECTRIC STOP: PEEK
2. FINISH(ES):
   - 2.1 BODY & CENTER CONDUCTOR: GOLD PLATED PER ASTM B-488 OVER NICKEL UNDERPLATE PER AMS-QQ-N-290.
   - 2.2 INSULATOR & DIELECTRIC STOP: NONE
   - 2.3 SHROUD: PASSIVATED PER ASTM A-967
3. ALL ITEMS TO BE PACKAGED AND SHIPPED UNASSEMBLED.

SSMP™ IS A REGISTERED TRADEMARK OF TENSOLITE COMPANY.

NOTICE

THIS DRAWING INCORPORATES A CONFIDENTIAL, PROPRIETARY DESIGN GENERATED BY TENSOLITE COMPANY AND ALL DESIGN, MANUFACTURING REPRODUCTION, USE AND SALE RIGHTS REGARDING THE SAME ARE EXPRESSLY RESERVED. IT IS SUBMITTED UNDER A CONFIDENTIAL RELATIONSHIP FOR A SPECIFIC PURPOSE AND THE RECIPIENT AGREES BY ACCEPTING THE DRAWING NOT TO COPY OR DISCLOSE ANY INFORMATION REGARDING IT TO ANY UNAUTHORIZED PERSON TO INCORPORATE IN OTHER PRODUCTS ANY SPECIAL FEATURES PECULIAR TO THIS DESIGN. ALL PATENT RIGHTS HERETO ARE EXPRESSLY RESERVED BY TENSOLITE COMPANY, LONG BEACH, CALIFORNIA 90815.

TOLERANCES AND NOTES EXCEPT AS NOTED

DIMENSIONS ARE IN INCHES
LINEAR .XX ±.010 .XXX ±.005 ANGULAR ± 1/2°
FRACTION ± 1/32

1. MACHINE FINISH 63 RMS
2. BREAK ALL SHARP EDGES .003 MAX.
3. MACHINED FILLETS .005 MAX.
4. MACHINED SURFACES SQUARE TO RESPECTIVE AXIS WITHIN .005 INCHES PER INCH.
5. MACHINED DIAMETERS CONCENTRIC WITHIN .001 T.I.R.
6. DIMENSIONS TO BE MET BEFORE PLATING.
7. CHAM PER ALL TAPERS 45°.
8. THREADS PER H-28.
9. REMOVE FRAYED EDGES ON TEFLON.
10. REMOVE ALL BURRS.

SEE NOTE(S)	–	SEE NOTE(S)	–
MATERIAL	SIZE	SPECIFICATION	PROCUREMENT

NEXT ASSY

APPROVAL INITIALS		DATE
DRAWN BY	ATV	06.19.01
CHECKED	PMAO	07.12.02
QUALITY		
ENGINEERING	ATV	07.17.02

Tensolite
HIGH PERFORMANCE CABLES & INTERCONNECT SYSTEMS
Long Beach, California 90815

TITLE: SSMP™ MALE BULKHEAD MOUNT STRAIGHT TO FLEX CABLE

SCALE	SUB-DRAWING/FORMAT	SHEET 1 OF 1
20/1	0LPXXX\0LP156	

SIZE	CAGE CODE	DRAWING NO.	REV.
C	30990	P156	B