P/N	APPLICABLE NOTE(S)	(Ø A)	INTERFACE
-1CC	1,2,4	.085	DETENT
-2CC	1,2,4	.088	NON-DETENT

REVISIONS				
ZONE	REV	DESCRIPTION	DATE	BY
–	D	ECO 11826	07/07/00	IMG
–	E	ECO 12307	10/04/00	AGS
–	F	ECO 13075	03.15.01	AGS

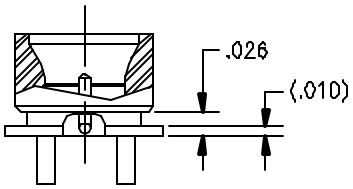

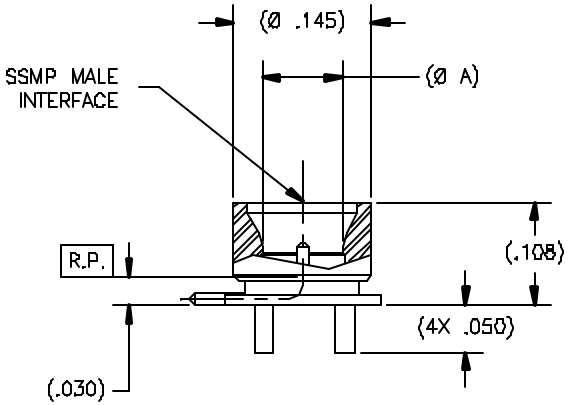

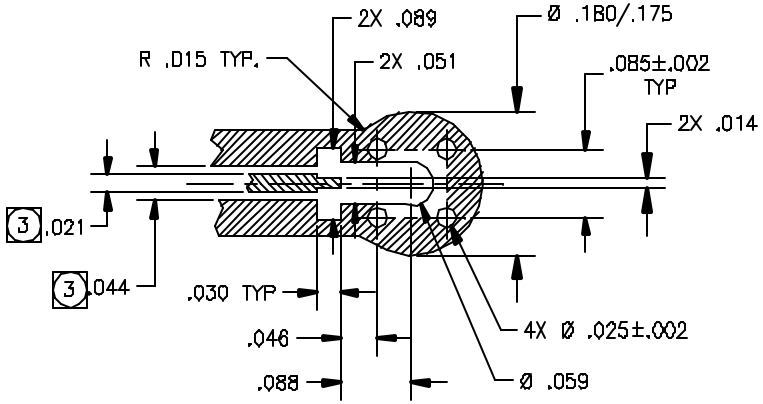

MOUNTING HOLE PATTERN

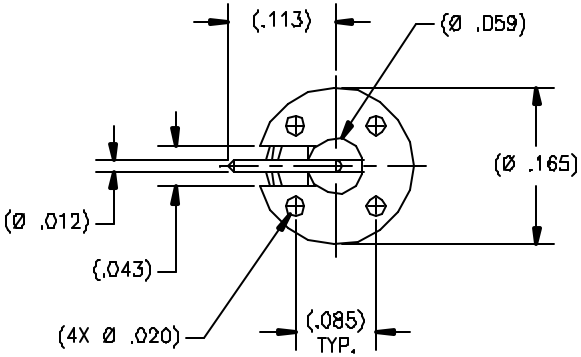

DRAWING NO.	REV.
P308	F

NOTE(S):

1. MATERIAL(S):
   1.1 CONTACT: BRASS ALLOY PER ASTM B-16
   1.2 INSULATOR: TORLON PER MIL-P-46179.
   1.3 BODY: BeCu ALLOY PER ASTM B-196 (OR B-197)
2. FINISH(ES):
   2.1 BODY & CONTACT: GOLD PLATED PER ASTM B-488 OVER NICKEL PLATE PER QQ-N-290
   2.3 INSULATOR: NONE
3. DIMENSIONS SHOWN ARE FOR ROGERS 4350 PCB MATERIAL. THESE DIMENSIONS MAY VARY DEPENDING ON PCB MATERIAL USED.
4. ELECTRICAL PERFORMANCE(S):
   4.1 FREQUENCY RANGE: DC-18GHz
   4.2 R.F. INSERTION LOSS: 0.1dB MAX TO 18GHz
   4.3 VSWR: 1.15:1 MAX TO 18GHz

NOTICE

THIS DRAWING INCORPORATES A CONFIDENTIAL, PROPRIETARY DESIGN GENERATED BY TONSELITE COMPANY AND ALL DESIGN, MANUFACTURING REPRODUCTION, USE AND SALE RIGHTS REGARDING THE SAME ARE EXPRESSLY RESERVED. IT IS SUBMITTED UNDER A CONFIDENTIAL RELATIONSHIP FOR A SPECIFIC PURPOSE AND THE RECIPIENT AGREES BY ACCEPTING THIS DRAWING NOT TO SUPPLY OR DISCLOSE ANY INFORMATION REGARDING IT TO ANY UNAUTHORIZED PERSON TO INCORPORATE IN OTHER PRODUCTS ANY SPECIAL FEATURES PECULIAR TO THIS DESIGN. ALL PATENT RIGHTS HERETO ARE EXPRESSLY RESERVED BY TONSELITE COMPANY, LONG BEACH, CALIFORNIA 90815.

TOLERANCES AND NOTES EXCEPT AS NOTED

DIMENSIONS ARE IN INCHES
LINEAR .XX ±.010 .XXX ±.005 ANGULAR ± 1/2°
FRACTION ± 1/64

1. MACHINE FINISH 63 RMS
2. BREAK ALL SHARP EDGES .003 MAX.
3. MACHINED FILLETS .005 MAX.
4. MACHINED SURFACES SQUARE TO RESPECTIVE AXIS WITHIN .005 INCHES PER INCH.
5. MACHINED DIAMETERS CONCENTRIC WITHIN .002 T.I.R.
6. DIMENSIONS TO BE MET BEFORE PLATING.
7. DRAW FOR ALL TAPERS 10°.
8. THREADS PER H-28.
9. REMOVE FRAYED EDGES ON TEFLON.
10. REMOVE ALL BURRS.

SEE NOTES	–	SEE NOTES	–
MATERIAL	SIZE	DESCRIPTION	PROCUREMENT

NEXT ASSY

APPROVAL INITIALS		DATE
DRAWN BY	ATV	10.21.99
CHECKED		
QUALITY		
ENGINEERING	NP	03.19.01

Tensolite HIGH PERFORMANCE CABLES & INTERCONNECT SYSTEMS Long Beach, California 90815

TITLE: SSMP MALE STRAIGHT SURFACE MOUNT

SCALE 10/1 | SUB-DRAWING/FORMAT OLPXXX\OLP308 | SHEET 1 OF 1

SIZE C | CAGE CODE 30990 | DRAWING NO. P308 | REV. F