REVISIONS				
ZONE	REV	DESCRIPTION	DATE	BY
–	–	–	–	–

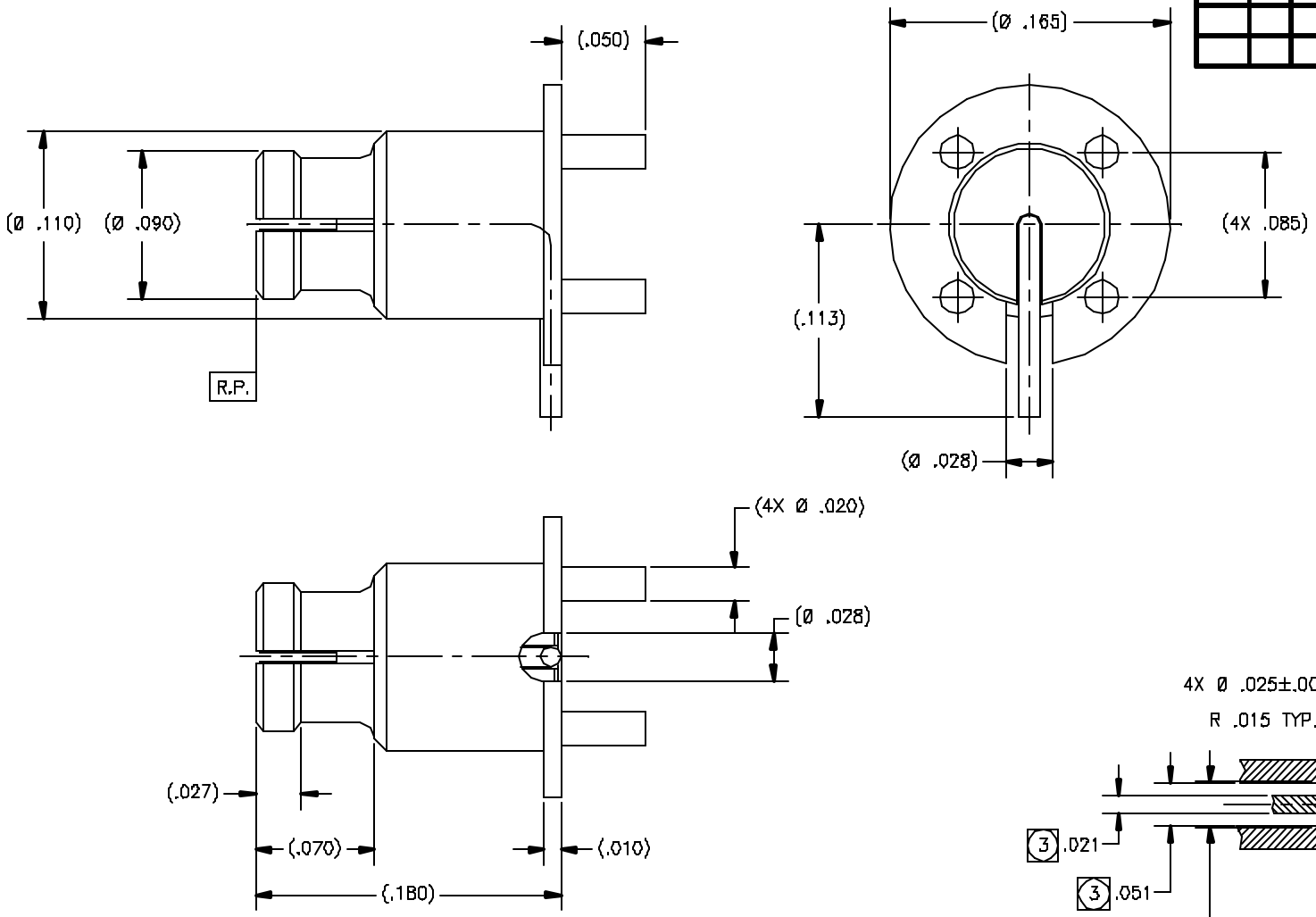

DRAWING NO.	REV.
P310	–

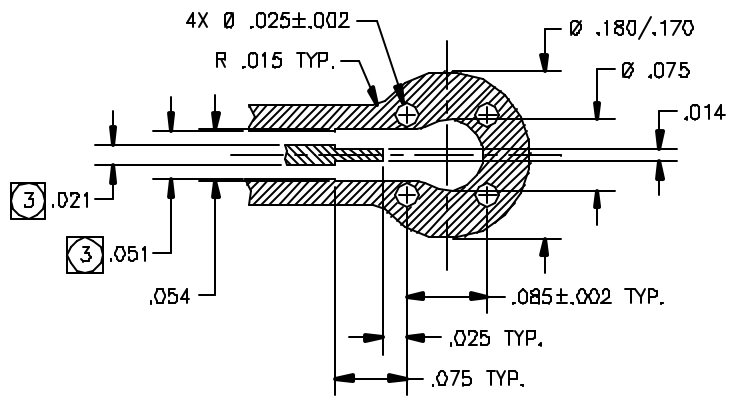

MOUNTING HOLE PATTERN

NOTE(S):

1. MATERIAL(S):
   1.1 BODY & CONTACT: BRASS ALLOY PER ASTM B-16
   1.2 INSULATOR: POLYAMIDE-IMIDE (TORLON) PER MIL-P-46179.
2. FINISH(ES):
   2.1 BODY & CONTACT: GOLD PLATED PER ASTM B-488 OVER NICKEL PLATE PER QQ-N-290
   2.3 INSULATOR: NONE
3. DIMENSIONS SHOWN ARE FOR ROGERS 4350 PCB MATERIAL. THESE DIMENSIONS MAY VARY DEPENDING ON PCB MATERIAL USED.

NOTICE

THIS DRAWING EMBODIES A CONFIDENTIAL, PROPRIETARY DESIGN ORIGINATED BY TENSOLITE COMPANY AND ALL DESIGN, MANUFACTURING REPRODUCTION, USE AND SALE RIGHTS REGARDING THE SAME ARE EXPRESSLY RESERVED. IT IS SUBMITTED UNDER A CONFIDENTIAL RELATIONSHIP FOR A SPECIFIED PURPOSE AND THE RECIPIENT AGREES BY ACCEPTING THIS DRAWING NOT TO SUPPLY OR DISCLOSE ANY INFORMATION REGARDING IT TO ANY UNAUTHORIZED PERSON OR TO INCORPORATE IN OTHER PROJECTS ANY SPECIAL FEATURES POPULAR TO THIS DESIGN. ALL PATENT RIGHTS HEREIN ARE EXPRESSLY RESERVED BY TENSOLITE COMPANY, LONG BEACH, CALIFORNIA 90815

TOLERANCES AND NOTES EXCEPT AS NOTED

DIMENSIONS ARE IN INCHES.
LINEAR .XX ±.010 .XXX ±.005 ANGULAR ± 1/2°
FRACTION ± 1/64

1. MACHINE FINISH 63 RMS
2. BREAK ALL SHARP EDGES .003 MAX.
3. MACHINED FILLETS .005 MAX.
4. MACHINED SURFACES SQUARE TO RESPECTIVE AXIS WITHIN .005 INCHES PER INCH.
5. MACHINED DIAMETERS CONCENTRIC WITHIN .002 T.I.R.
6. DIMENSIONS TO BE NET BEFORE PLATING.
7. DRAW FOR ALL TAPERS 10°.
8. THREADS PER H-28.
9. REMOVE FRAYED EDGES ON TEFLON.
10. REMOVE ALL BURRS.

–	–	–	–
MATERIAL	SIZE	SPECIFICATION	PROCUREMENT

NEXT ASSY

APPROVAL INITIALS		DATE
DRAWN BY	ACS	04.20.01
CHECKED		
QUALITY		
ENGINEERING	JD	04.20.01

Tensolite RF/Microwave Connectors
Long Beach, California 90815

TITLE SSMP FEMALE RIGHT ANGLE SURFACE MOUNT

SCALE	SUB-DIRECTORY\FILENAME	SHEET 1 OF 1
20:1	_OLPXXX\OLP310	

SIZE	CODE IDENT	DRAWING NO.	REV.
C	30990	P310	–