P/N	APPLICABLE NOTE(S)	Ø A	B	C	D
−1CC	1	.085	(.265)	(.205)	NA
−2CC	1 2	.047	(.230)	(.190)	(.135)

REVISIONS				
ZONE	REV.	DESCRIPTION(S)	DATE	BY
–	D	ECO 12476	11.03.00	AGS
–	E	ECO 12730	03/05/01	HDB
–	F	ECO 18995	02.02.06	DKN

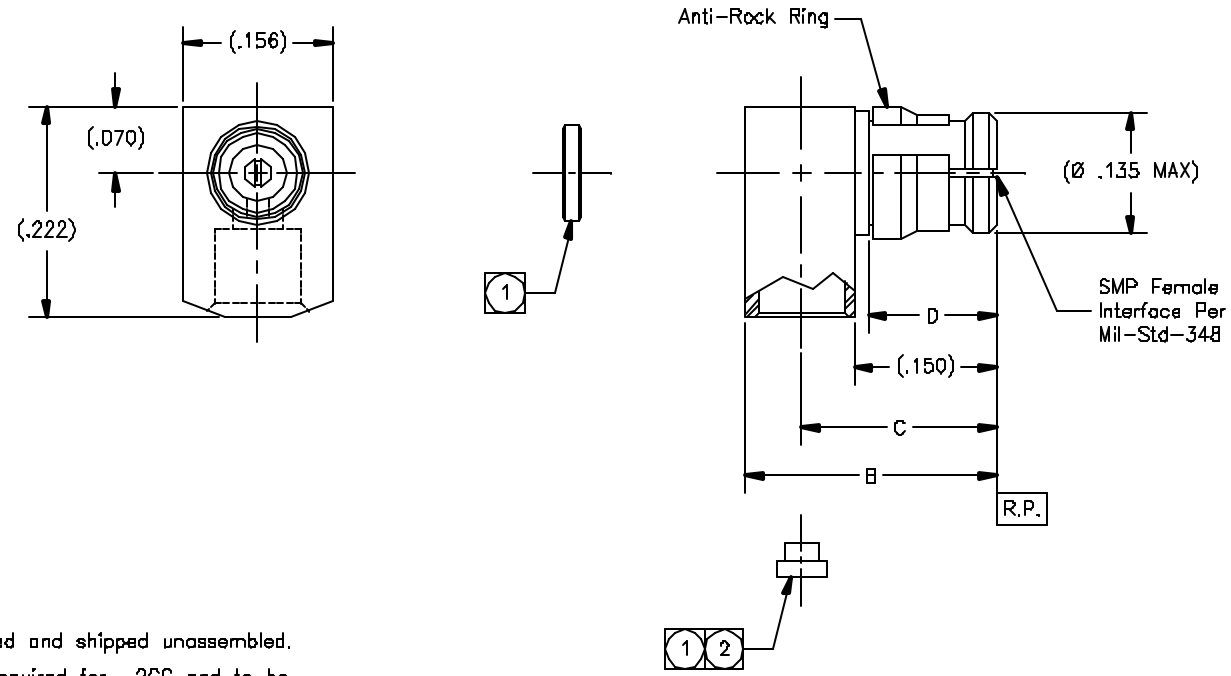

NOTE(S):

1. Cap to be packaged and shipped unassembled.
2. dielectric stop is required for −2CC and to be packaged and shipped unassembled.

DRAWING NO.	REV.
P604	F

MATERIAL(S):

Body:
BeCu alloy per ASTM B−196.
Center Conductor:
BeCu alloy per ASTM B−196.
Anti−Rock Ring And Cap:
BeCu alloy per ASTM B−196.
Dielectric:
PTFE per ASTM D−1710.
Dielectric Stop (−2CC):
Torlon per ASTM D−5204
or Mil−P−46179.

ELECTRICAL(S):

Impedance: 50 Ohms nominal.
Freqancy Range: DC to 18 GHz.
VSWR: 1.20:1 max @ 18 GHz.
Insertion Loss: .12 X √f(GHz).
Working Voltage: 335 Vrms max @ sea level.
65 Vrms @ 70,000 ft.
Dielectric Withstanding Voltage: 500 Vrms min.
R.F. HiPot Voltage: 325 Vrms min @ 5MHz.
Corona Level: 190 Vrms @ 70,000 ft.
Insulation Resistance: 5,000 MegOhms min.
Contact Resistance:
Center Contact: 6.0 Milliohm max.
Outer Contact: 2.0 Milliohm max.
R.F. Leakage: −80 dB to 3 GHz.

MECHANICAL(S):

Mating Characteristics:
Interface per Mil−Std−348.
Force To Engage & Disengage:
Engage:
15 pounds max for Full Detent.
10 pounds max for Limited Detent.
2 pounds max for Smooth Bore.
Disengage:
5 pounds min for Full Detent.
2 pounds min for Limited Detent.
.5 pound min for Smooth Bore.
Center Contact Retention:
Axial Force: 1.5 pounds min.
Radial Torque: NA
Connector Durability:
100 cycles min.

ENVIRONMENTAL:

Temperature Range: −65° to +165°.
Thermal Shock:
Mil−Std−202, Method 107, Test Cond. B.
Moisture Resistance:
Mil−Std−202, Method 106, except step 7b shall be omitted. Insulation resistance at least 1,000 MegOhms within 5 minutes after removal from humidity.
Corrosion:
Mil−Std−202, Method 101, Test Cond. B.
Vibration:
Mil−Std−202, Method 204, Test Cond. D.
Shock:
Mil−Std−202, Method 213, Test Cond. I.
Solderability:
Mil−Std−202, Method 208.

FINISH(ES):

Body, Center Conductor, Anti−Rock Ring And Cap:
Gold plate per ASTM B−488, over nickel under plate per AMS−QQ−N−290.

APPLICABLE TENSOLITE DOCUMENTS

WORK STD	PROD INST	ASSY INST
NA	NA	NA

NOTICE

THIS DRAWING INCLUDES A CONFIDENTIAL, PROPRIETARY DESIGN GENERATED BY TENSOLITE COMPANY AND ALL DESIGN, MANUFACTURING REPRODUCTION, USE AND SALE RIGHTS REGARDING THE SAME ARE EXPRESSLY RESERVED. IT IS SUBMITTED UNDER A CONFIDENTIAL RELATIONSHIP FOR A SPECIFICD PURPOSE AND THE RECIPIENT AGREES BY ACCEPTING THE DRAWING NOT TO COPY OR DISCLOSE ANY INFORMATION REGARDING IT TO ANY UNAUTHORIZED PERSON TO INCORPORATE IN OTHER PRODUCTS ANY SPECIAL FEATURES PECULIAR TO THIS DESIGN. ALL PATENT RIGHTS RESERVED ARE EXPRESSLY RESERVED BY TENSOLITE COMPANY, LONG BEACH, CALIFORNIA 90815.

TOLERANCES AND NOTES EXCEPT AS NOTED

DIMENSIONS ARE IN INCHES.
LINEAR .XX ±.010 .XXX ±.005 ANGULAR ± 1/2°
FRACTION ± 1/64

1. MACHINE FINISH 63 RMS
2. BREAK ALL SHARP EDGES .003 MAX.
3. MACHINED FILLETS .005 MAX.
4. MACHINED SURFACES SQUARE TO RESPECTIVE AXIS WITHIN .005 INCHES PER INCH.
5. MACHINED DIAMETERS CONCENTRIC WITHIN .002 T.I.R.
6. DIMENSIONS TO BE MET BEFORE PLATING.
7. CHAMFER ALL THREADS 45°.
8. THREADS PER H-28.
9. REMOVE FRAYED EDGES ON TEFLON.
10. REMOVE ALL BURRS.

–	–	–	–
MATERIAL	SIZE	DESCRIPTION	PROCUREMENT

NEXT ASSY

APPROVAL INITIALS		DATE
DRAWN BY	DKN	05.17.99
CHECKED	PJMAO	02.09.06
QUALITY		
ENGINEERING	PM	02.09.06

Tensolite
HIGH PERFORMANCE CABLES & INTERCONNECT SYSTEMS
Long Beach, California 90815

TITLE
SMP FEMALE MITER R/A
TO SEMI-RIGID CABLE (18 GHz)

SCALE 10:1 | SUB-DIRECTORY\FILENAME _OUTLINE\DLPXXX | SHEET 1 OF 1

SIZE	CODE IDENT	DRAWING NO.	REV.
C	30990	P604	F