P/N	APPLICABLE NOTES
-1	1,2,3,4,5,6

REVISIONS				
ZONE	REV	DESCRIPTION	DATE	BY
-	A	ECO 11768	05/31/00	IMG
-	B	ECO 12047	08.01.00	DKN
-	C	ECO 12732	03/02/01	HDB

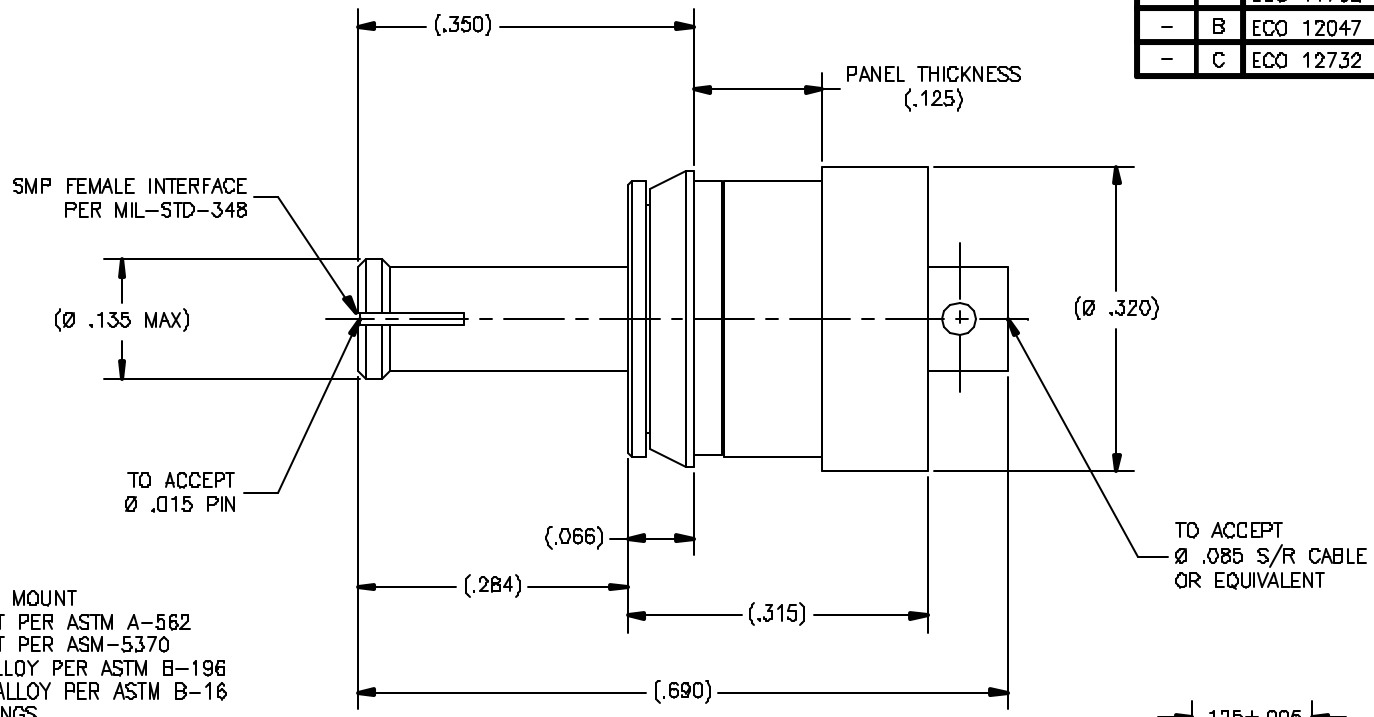

NOTE(S):

1. MATERIALS
   - 1.1 BODY, FLOAT MOUNT
     - 1.1.1 303 SST PER ASTM A-562
     - 1.1.2 304 SST PER ASM-5370
     - 1.1.3 BeCu ALLOY PER ASTM B-196
     - 1.1.4 BRASS ALLOY PER ASTM B-16
   - 1.2 WASHERS, RINGS
     - 1.2.1 303 SST PER ASTM A-562
     - 1.2.2 304 SST PER ASM-5370
     - 1.2.3 BeCu ALLOY PER ASTM B-196
   - 1.3 SPRING
     - 1.3.1 MUSIC WIRE
   - 1.4 CENTER CONDUCTOR
     - 1.4.1 BeCu ALLOY PER ASTM B-196
   - 1.5 INSULATOR
     - 1.5.1 PTFE TEFLON PER ASTM D-1710
2. FINISH(ES)
   - 2.1 BODY, CENTER CONDUCTOR:
     - 2.1.1 GOLD PLATED PER ASTM B-488
   - 2.2 WASHERS, RINGS
     - 2.2.1 GOLD PLATED PER ASTM B-488
     - 2.2.2. PASSIVATED PER ASTM A-967
   - 2.3 SPRING
     - 2.3.1 NICKEL PLATED PER AMS-QQ-N-290
3. MAX FLOAT
   - *AXIAL: .125 INCH
   - *RADIAL: ±.030 INCH
4. SPRING RATE
   - 38.5 LBS/INCH
5. SPRING FORCE
   - *PRE LOAD: 0.81 LBS
   - *.035 COMPRESSION: 2.15 LBS
   - *.125 COMPRESSION: 5.6 LBS
6. ELECTRICAL PERFORMANCE:
   - 6.1 FREQUENCY RANGE: dc-18GHz
   - 6.2 R.F. INSERTION LOSS: 0.25dB Max to 18GHz
   - 6.3 VSWR: 1.20:1 Max. to 18GHz

DRAWING NO.	REV.
P634	C

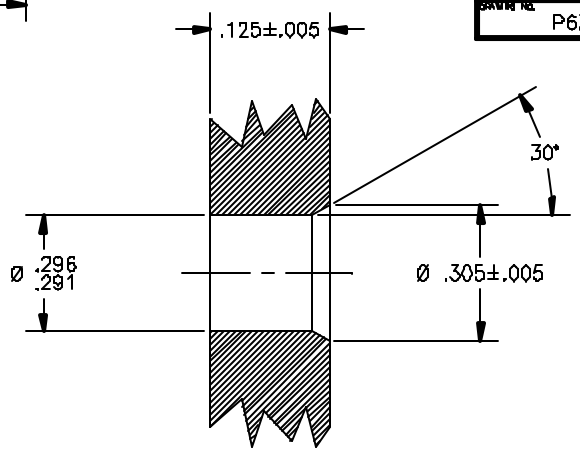

MOUNTING PANEL

APPLICABLE TENSOLITE DOCUMENTS

WORK STD	PROD INST	ASSY INST
NA	NA	NA

NOTICE
THIS DRAWING INCLUDES A CONFIDENTIAL, PROPRIETARY DESIGN GENERATED BY TENSOLITE COMPANY AND ALL DESIGN, MANUFACTURING INFORMATION, USE AND SALE RIGHTS REGARDING THE SAME ARE EXPRESSLY RESERVED. IT IS SUBMITTED UNDER A CONFIDENTIAL RELATIONSHIP FOR A SPECIFIC PURPOSE AND THE RECIPIENT AGREES BY ACCEPTING THE DRAWING NOT TO SUPPLY OR DISCLOSE ANY INFORMATION REGARDING IT TO ANY UNAUTHORIZED PERSON TO INCORPORATE IN OTHER PRODUCTS ANY SPECIAL FEATURES PECULIAR TO THIS DESIGN. ALL PATENT RIGHTS HERETO ARE EXPRESSLY RESERVED BY TENSOLITE COMPANY, LONG BEACH, CALIFORNIA 90815.

TOLERANCES AND NOTES
EXCEPT AS NOTED
DIMENSIONS ARE IN INCHES
LINEAR .XX ±.010 .XXX ±.005 ANGULAR ± 1/2°
FRACTION ± 1/32
1. MACHINE FINISH 63 RMS
2. BREAK ALL SHARP EDGES .003 MAX.
3. MACHINED FILLETS .005 MAX.
4. MACHINED SURFACES SQUARE TO RESPECTIVE AXIS WITHIN .005 INCHES PER INCH.
5. MACHINED DIAMETERS CONCENTRIC WITHIN .001 T.I.R.
6. DIMENSIONS TO BE MET BEFORE PLATING.
7. CHAMFER ALL THREADS 45°.
8. THREADS PER H-28.
9. REMOVE FRAYED EDGES ON TEFLON.
10. REMOVE ALL BURRS.

MATERIAL	SIZE	SPECIFICATION	PROCUREMENT
-	-	-	-

NEXT ASSY

APPROVAL INITIALS		DATE
DRAWN BY	ATV	08.04.99
CHECKED		
QUALITY		
ENGINEERING	ATV	12.14.01

Tensolite
HIGH PERFORMANCE CABLES & INTERCONNECT SYSTEMS
Long Beach, California 90815

TITLE: SMP FEMALE FLOAT MOUNT STRAIGHT TO Ø.085 S/R CABLE EXTENDED INTERFACE

SCALE: NONE | SUB-DIRECTORY/FILENAME: OLPXXX\OLP634 | SHEET 1 OF 1

SIZE: C | CAGE CODE: 30990 | DRAWING NO.: P634 | REV.: C