P/N	APPLICABLE NOTE(S)	CABLE TYPES	FIG.	(Ø A)
-1CC	1,2,3	RG178	1	.056
-2CC	1,2,3	RG316	1	.084
-3CC	1,2,3	RD178	1	.075
-4CC	1,2,3	RD316	1	.101
-5CC	1,2,3	RG178	2	.056
-6CC	1,2,3	RG316	2	.084
-7CC	1,2,3	RD178	2	.075
-8CC	1,2,3	RD316	2	.101
-9CC	1,2,3	T-FLEX 405HF	1	.090
-10CC	1,2,3	T-FLEX 405HF	2	.090

REVISIONS				
ZONE	REV	DESCRIPTION	DATE	BY
-	F	ECO 12734	03/02/01	HDB
-	G	ECO 13519	07/27/01	AGS
-	H	ECO 17979	02.24.05	RC

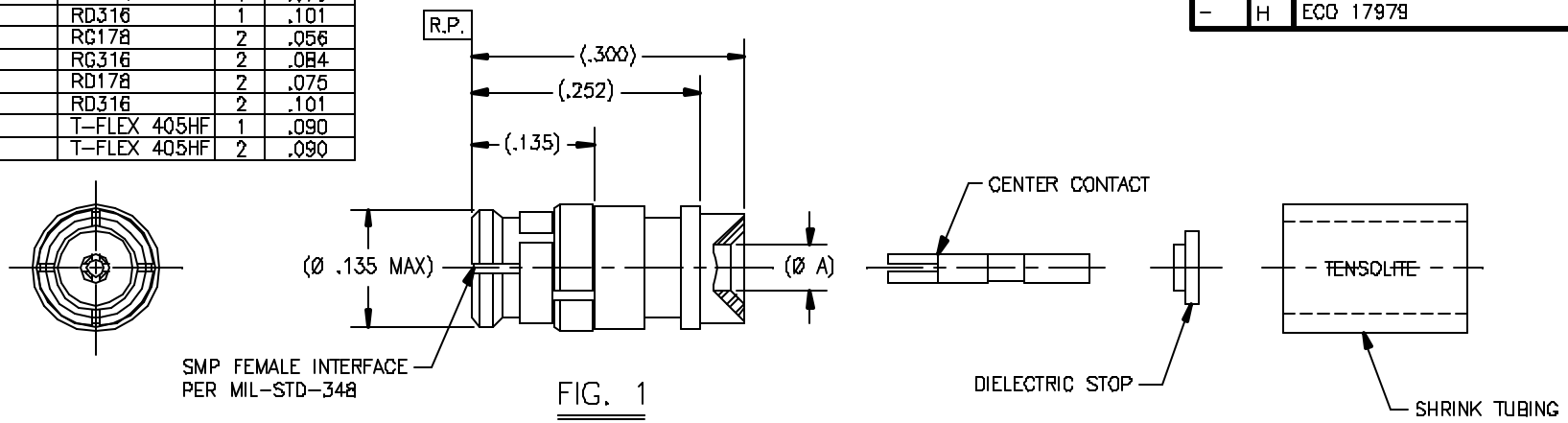

FIG. 1

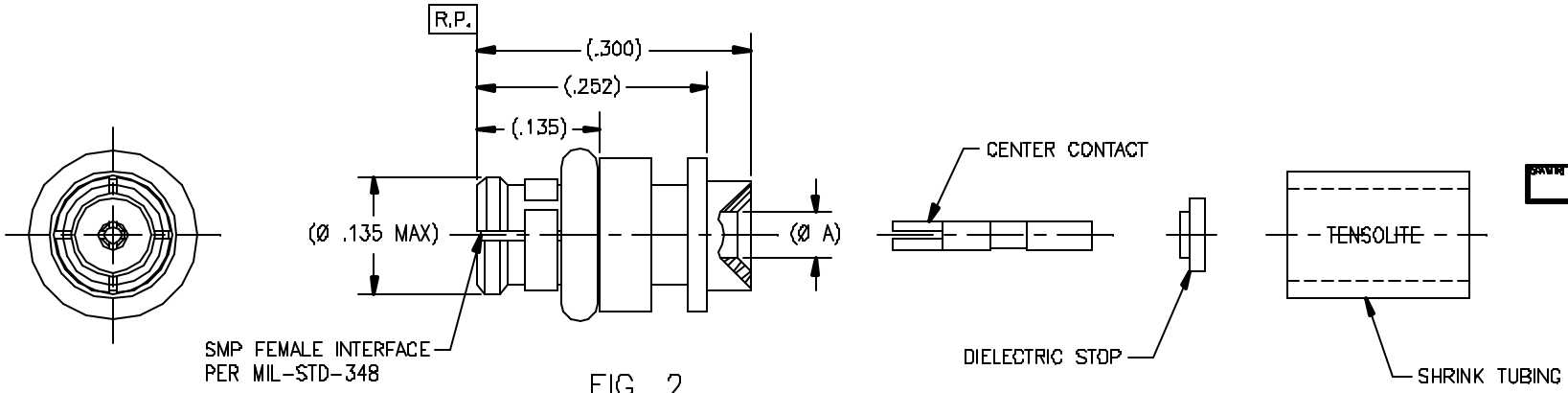

FIG. 2

DRAWING NO.	REV.
P657	H

NOTE(S):

1. MATERIAL(S):
   - 1.1 BODY, ANTI-ROCK RING, EMI RING, CENTER CONDUCTOR: BeCU ALLOY PER ASTM B-196
   - 1.2 DIELECTRIC STOP: "TORLON PER MIL-P-46179 OR POLYETHEREKETONE"
   - 1.3 INSULATOR: TEFLON PER ASTM D-1710
   - 1.4 EMI GASKET: SILICONE PER MIL-G-83528
   - 1.5 SHRINK TUBING: MIL-DTL-23053/4
2. FINISH(ES):
   - 2.1 BODY, ANTI-ROCK RING, EMI RING, CENTER CONDUCTOR: GOLD PLATED PER ASTM B-488 OVER NICKEL UNDERPLATE PER AMS-QQ-N-290.
   - 2.2 INSULATOR, DIELECTRIC STOP, EMI GASKET: NONE
   - 2.3 SHRINK TUBING: COLOR BLACK
3. ELECTRICAL PERFORMANCE(S):
   - 3.1 FREQUENCY RANGE: DC-18GHz
   - 3.2 R.F. INSERTION LOSS: 0.1 dB Max to 18GHz
   - 3.3 VSWR: 1.25:1 Max to 18GHz

APPLICABLE TENSOLITE DOCUMENTS		
WORK STD	PROD INST	ASSY INST
NA	NA	AI-365

NOTICE
THIS DRAWING INCLUDES A CONFIDENTIAL, PROPRIETARY DESIGN GENERATED BY TENSOLITE COMPANY AND ALL DESIGN, MANUFACTURING INFORMATION, USE AND SALE RIGHTS REGARDING THE SAME ARE EXPRESSLY RESERVED. IT IS SUBMITTED UNDER A CONFIDENTIAL RELATIONSHIP FOR A SPECIFIC PURPOSE AND THE RECIPIENT AGREES BY ACCEPTING THE DRAWING NOT TO SUPPLY OR DISCLOSE ANY INFORMATION REGARDING IT TO ANY UNAUTHORIZED PERSON TO INCORPORATE IN OTHER PRODUCTS ANY SPECIAL FEATURES PECULIAR TO THIS DESIGN. ALL PATENT RIGHTS HERETO ARE EXPRESSLY RESERVED BY TENSOLITE COMPANY, LONG BEACH, CALIFORNIA 90815.

TOLERANCES AND NOTES EXCEPT AS NOTED
DIMENSIONS ARE IN INCHES
LINEAR .XX ±.010 .XXX ±.005 ANGULAR ± 1/2°
FRACTION ± 1/32
1. MACHINE FINISH 63 RMS
2. BREAK ALL SHARP EDGES .003 MAX.
3. MACHINED FILLETS .005 MAX.
4. MACHINED SURFACES SQUARE TO RESPECTIVE AXIS WITHIN .005 INCHES PER INCH.
5. MACHINED DIAMETERS CONCENTRIC WITHIN .001 T.I.R.
6. DIMENSIONS TO BE MET BEFORE PLATING.
7. CHAMFER ALL THREADS 45°.
8. THREADS PER H-28.
9. REMOVE FRAYED EDGES ON TEFLON .005 MAX
10. REMOVE ALL BURRS.

SEE NOTE(S)	-	SEE NOTE(S)	-
MATERIAL	SIZE	FINISH	PROCUREMENT

NEXT ASSY

APPROVAL INITIALS		DATE
DRAWN BY	BRD	01/31/96
CHECKED		
QUALITY		
ENGINEERING	DNg	02/25/05

Tensolite
HIGH PERFORMANCE CABLES & INTERCONNECT SYSTEMS
Long Beach, California 90815

TITLE: SMP FEMALE STRAIGHT TO FLEXIBLE CABLE (18GHz)

SCALE 10:1 | SUB-DIRECTORY/FILENAME _QLPX\QLP657 | SHEET 1 OF 1

SIZE C | CODE 30990 | DRAWING NO. P657 | REV. H