P/N	APP. NOTES	(A)	(B)	(Ø C)	(Ø D)	(E)	(F)	(G)
-1SF	1,2	.328	.187	.098	.480	.120	.045	.004
-2SF	1,2	.481	.223	.102	.625	.120	.045	.002
-3SF	1,2	.282	.165	.073	.400	.120	.045	.002
-4SF	1,2	.400	.186	.103	.550	.120	.045	.004
-5SF	1,2	.282	.165	.073	.400	.120	.045	.005
-6SF	1,2,3	.282	.165	3	.400	.120	.045	.005
-7SF	1,2	NR	NR	NR	.625	.120	.075	.003
-8SF	1,2	.481	.223	.102	.625	.120	.045	.004
-9SF	1,2	.282	.165	.073	.400	.120	.045	.004
-10SF	1,2	.328	.187	.098	.480	.120	.045	.005

REVISIONS				
ZONE	REV	DESCRIPTION	DATE	BY
–	D	ECO 11189	01/31/00	E.A.
–	E	ECO 11722	06/27/00	IMG
–	F	ECO 12344	10.09.00	ATV

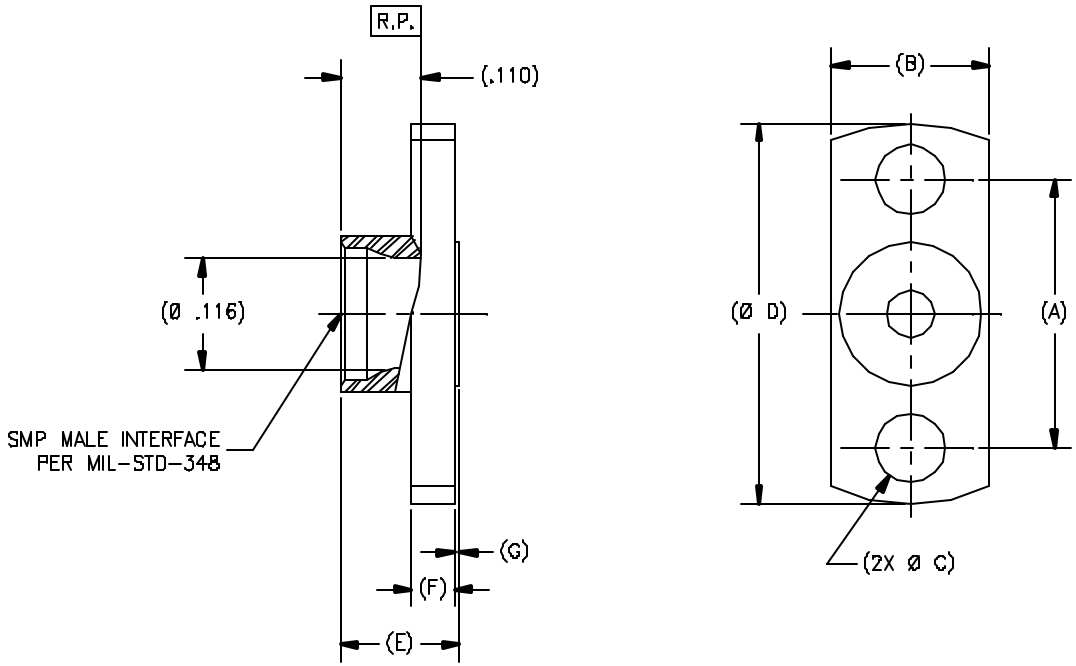

DRAWING NO. P670 REV. F

NOTE(S):

1. MATERIAL: 303 SST PER ASTM A-582
2. FINISH: PASSIVATED PER ASTM A-967
3. 2X #0-80 UNF-2B X Ø .085 X 90° COUNTERSINK.

NOTICE

THIS DRAWING INCORPORATES A CONFIDENTIAL, PROPRIETARY DESIGN GENERATED BY TENSOLITE COMPANY AND ALL DESIGN, MANUFACTURING INFORMATION, USE AND SALE RIGHTS REGARDING THE SAME ARE EXPRESSLY RESERVED. IT IS SUBMITTED UNDER A CONFIDENTIAL RELATIONSHIP FOR A SPECIFIC PURPOSE AND THE RECIPIENT AGREES BY ACCEPTING THE DRAWING NOT TO COPY OR DISCLOSE ANY INFORMATION REGARDING IT TO ANY UNAUTHORIZED PERSON TO INCORPORATE IN OTHER PRODUCTS ANY SPECIAL FEATURES PECULIAR TO THIS DESIGN. ALL PATENT RIGHTS HERETO ARE EXPRESSLY RESERVED BY TENSOLITE COMPANY, LONG BEACH, CALIFORNIA 90815.

TOLERANCES AND NOTES EXCEPT AS NOTED

DIMENSIONS ARE IN INCHES.
LINEAR .XX ±.010 .XXX ±.005 ANGULAR ± 1/2°
FRACTION ± 1/32

1. MACHINE FINISH 63 RMS
2. BREAK ALL SHARP EDGES .003 MAX.
3. MACHINED FILLETS .005 MAX.
4. MACHINED SURFACES SQUARE TO RESPECTIVE AXIS WITHIN .005 INCHES PER INCH.
5. MACHINED DIAMETERS CONCENTRIC WITHIN .002 TIR.
6. DIMENSIONS TO BE MET BEFORE PLATING.
7. CHAMFER ALL THREADS 45°.
8. THREADS PER H-28.
9. REMOVE FRAYED EDGES ON TEFLON.
10. REMOVE ALL BURRS.

NEXT ASSY			–	–	–	–
			MATERIAL	SIZE	DESCRIPTION	PROCUREMENT
APPROVAL	INITIALS	DATE	Tensolite HIGH PERFORMANCE CABLES & INTERCONNECT SYSTEMS Long Beach, California 90815			
DRAWN BY	BRD	02/15/96	TITLE SMP FULL DETENT STRAIGHT 2 HOLE FLANGE MOUNT SHROUD			
CHECKED			SCALE 10/1	SUB-DIRECTORY/FILENAME _OLP6XX\OLP670	SHEET 1 OF 1	
QUALITY						
ENGINEERING	ATV	10.09.00	SIZE C	CODE 30990	DRAWING NO. P670	REV. F