P/N	APP. NOTES	(A)	(B)	(Ø C)	(Ø D)	(E)	(F)
-1SF	1,2	.328	.187	.098	.480	.120	.004
-2SF	1,2	.481	.223	.102	.625	.120	.002
-3SF	1,2	.282	.165	.073	.400	.120	.002

REVISIONS

ZONE	REV	DESCRIPTION	DATE	BY
-	C	ECO 11725	06/27/00	IMG
-	D	ECO 12292	10/03/00	IMG
-	E	ECO 12360	10.10.00	ATV

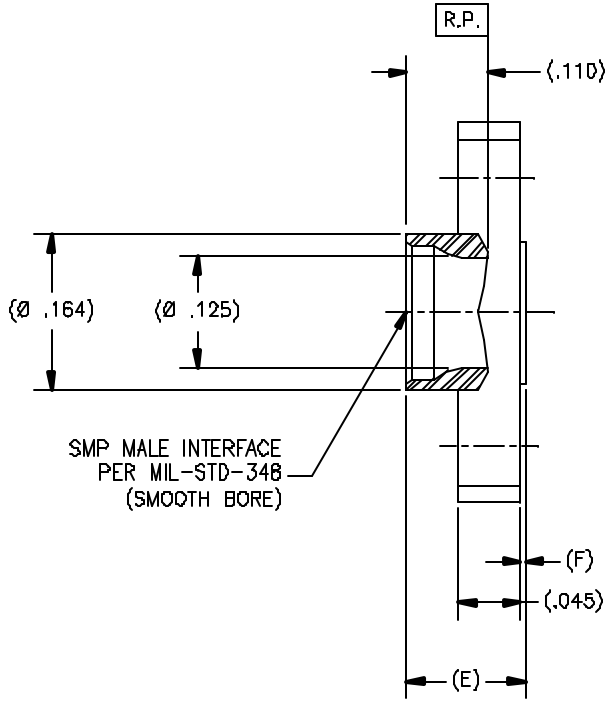

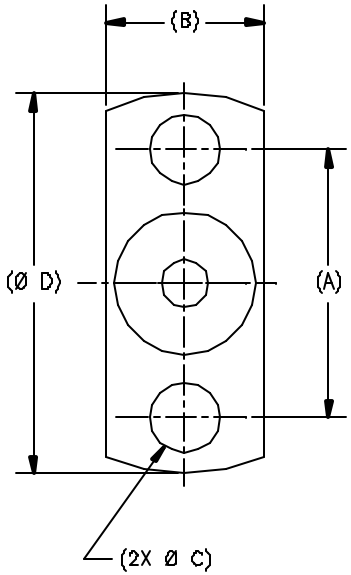

DRAWING NO. P673 REV. E

NOTE(S):

1. MATERIAL: 303 SST PER ASTM A-582
2. FINISH: PASSIVATED PER ASTM A-967

NOTICE

THIS DRAWING EMBODIES A CONFIDENTIAL, PROPRIETARY DESIGN ORIGINATED BY TENSOLITE COMPANY AND ALL DESIGN, MANUFACTURING REPRODUCTION, USE AND SALE RIGHTS REGARDING THE SAME ARE EXPRESSLY RESERVED. IT IS SUBMITTED UNDER A CONFIDENTIAL RELATIONSHIP FOR A SPECIFIED PURPOSE AND THE RECIPIENT AGREES BY ACCEPTING THIS DRAWING NOT TO SUPPLY OR DISCLOSE ANY INFORMATION REGARDING IT TO ANY UNAUTHORIZED PERSON OR TO INCORPORATE IN OTHER PROJECTS ANY SPECIAL FEATURES POPULAR TO THIS DESIGN. ALL PATENT RIGHTS HEREIN ARE EXPRESSLY RESERVED BY TENSOLITE COMPANY, LONG BEACH, CALIFORNIA 90815

TOLERANCES AND NOTES
EXCEPT AS NOTED
DIMENSIONS ARE IN INCHES
LINEAR .XX ±.010 .XXX ±.005 ANGULAR ± 1/2°
FRACTION ± 1/32

1. MACHINE FINISH 63 RMS
2. BREAK ALL SHARP EDGES .003 MAX.
3. MACHINED FILLETS .005 MAX.
4. MACHINED SURFACES SQUARE TO RESPECTIVE AXIS WITHIN .005 INCHES PER INCH.
5. MACHINED DIAMETERS CONCENTRIC WITHIN .001 T.I.R.
6. DIMENSIONS TO BE MET BEFORE PLATING.
7. CHAM FOR ALL THREADS 45°.
8. THREADS PER H-28.
9. REMOVE FRAYED EDGES ON TEFLON.
10. REMOVE ALL BURRS.

MATERIAL	SIZE	SPECIFICATION / PROCUREMENT
-	-	- / -

NEXT ASSY

APPROVAL INITIALS		DATE
DRAWN BY	BRD	02/15/96
CHECKED		
QUALITY		
ENGINEERING	ATV	10.10.00

Tensolite RF/Microwave Connectors
Long Beach, California 90815

TITLE SMP SHROUD SMOOTH BORE
STRAIGHT 2 HOLE FLANGE MOUNT

SCALE 10/1 SUB-DIRECTORY/FILENAME _OLP6XX\OLP673 SHEET 1 OF 1

SIZE C CODE IDENT 30990 DRAWING NO. P673 REV. E