P/N	APPLICABLE NOTES	INTERFACE(S)	(Ø A)
-1	1,2	FULL DETENT	.116
-2	1,2	LIMITED DETENT	.120
-3	1,2	SMOOTH BORE	.125

REVISIONS

ZONE	REV	DESCRIPTION	DATE	BY
-	B	ECO 8413	03/18/98	JLA
-	C	ECO 11729	06/27/00	IMG
-	D	ECO 12294	10/03/00	IMG

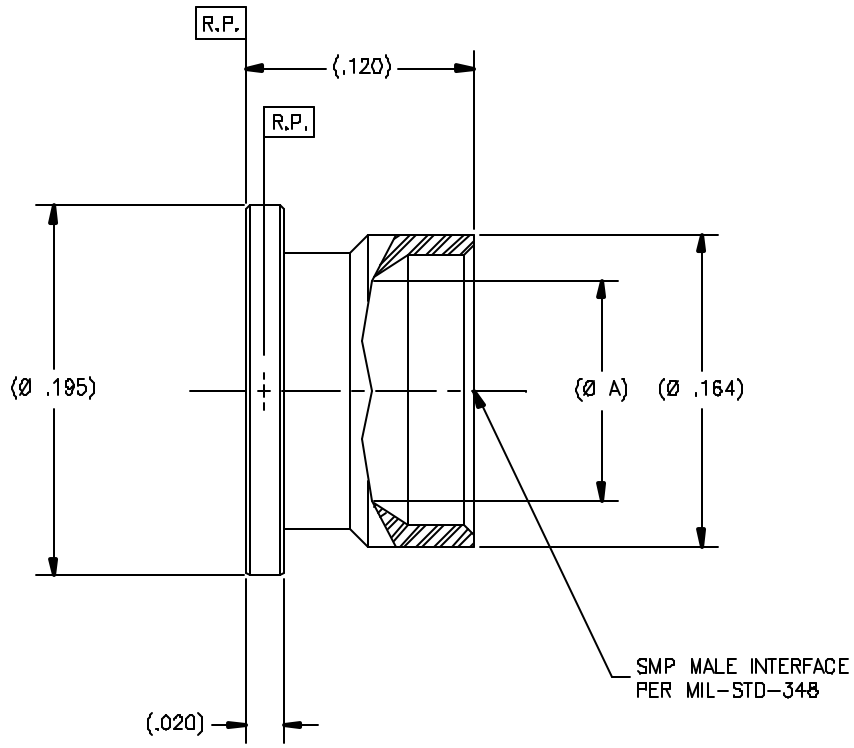

DRAWING NO. P677 REV. D

NOTE(S):

1. MATERIAL:
   BeCu ALLOY PER ASTM B-196(OR B-197)
2. FINISH:
   GOLD PLATE PER ASTM B-488 OVER
   NICKEL PLATE PER QQ-N-290

NOTICE

THIS DRAWING EMBODIES A CONFIDENTIAL, PROPRIETARY DESIGN ORIGINATED BY TENSOLITE COMPANY AND ALL DESIGN, MANUFACTURING REPRODUCTION, USE AND SALE RIGHTS REGARDING THE SAME ARE EXPRESSLY RESERVED. IT IS SUBMITTED UNDER A CONFIDENTIAL RELATIONSHIP FOR A SPECIFIED PURPOSE AND THE RECIPIENT AGREES BY ACCEPTING THIS DRAWING NOT TO SUPPLY OR DISCLOSE ANY INFORMATION REGARDING IT TO ANY UNAUTHORIZED PERSON OR TO INCORPORATE IN OTHER PROJECTS ANY SPECIAL FEATURES PECULIAR TO THIS DESIGN. ALL PATENT RIGHTS HEREIN ARE EXPRESSLY RESERVED BY TENSOLITE COMPANY, LONG BEACH, CALIFORNIA 90815

TOLERANCES AND NOTES
EXCEPT AS NOTED
DIMENSIONS ARE IN INCHES
LINEAR .XX ±.010 .XXX ±.005 ANGULAR ± 1/2°
FRACTION ± 1/32

1. MACHINE FINISH 63 RMS
2. BREAK ALL SHARP EDGES .003 MAX.
3. MACHINED FILLETS .005 MAX.
4. MACHINED SURFACES SQUARE TO RESPECTIVE AXIS WITHIN .005 INCHES PER INCH.
5. MACHINED DIAMETERS CONCENTRIC WITHIN .001 T.I.R.
6. DIMENSIONS TO BE MET BEFORE PLATING.
7. CHAM FOR ALL THREADS 45°.
8. THREADS PER H-28.
9. REMOVE FRAYED EDGES ON TEFLON.
10. REMOVE ALL BURRS.

MATERIAL: SEE NOTE(S)	SIZE: -	SPECIFICATION: SEE NOTE(S) / PROCUREMENT: -
NEXT ASSY		
APPROVAL INITIALS	DATE	
DRAWN BY: BRD	12/02/99	
CHECKED		
QUALITY		
ENGINEERING: ATV	10.05.00	

Tensolite RF/Microwave Connectors
Long Beach, California 90815

TITLE: SMP SHROUD SOLDER-IN SURFACE MOUNT

SCALE 20/1 | SUB-DIRECTORY/FILENAME _OLPXX\OLP677 | SHEET 1 OF 1

SIZE C | CODE 30990 | DRAWING NO. P677 | REV. D