P/N	INTERFACE(S)	(Ø A)	L	E	DETAIL
-1CC	FULL DETENT	.116	.050	.030	A
-2CC	LIMITED DETENT	.120	.050	.030	A
-3CC	SMOOTH BORE	.125	.050	.030	A
-4CC	FULL DETENT	.116	.240	.220	B
-5CC	LIMITED DETENT	.120	.240	.220	B
-6CC	SMOOTH BORE	.125	.240	.220	B

REVISIONS

ZONE	REV	DESCRIPTION	DATE	BY
–	B	ECO 11752	06/27/00	IMG
–	C	ECO 12271	09/28/00	IMG
–	D	ECO 18822 (ADD -4CC thru -6CC)	11.02.05	DKN

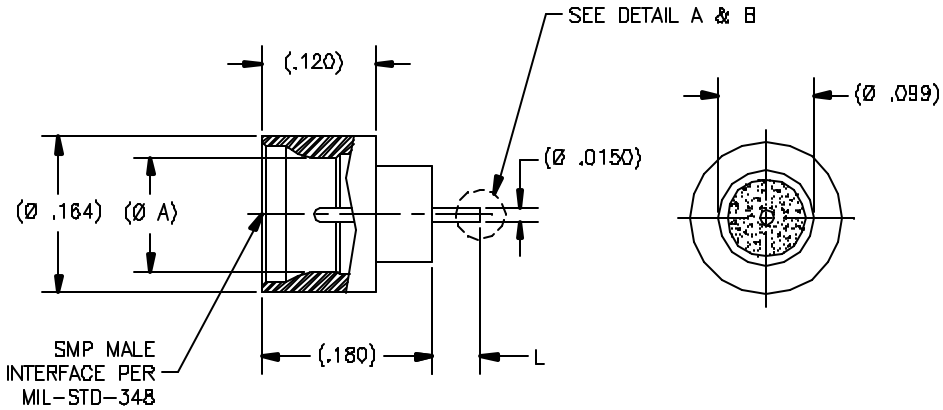

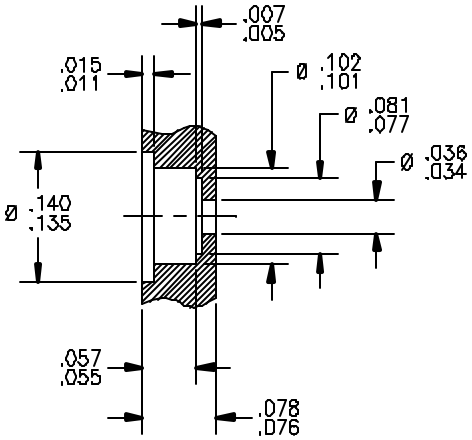

RECOMMENDED
MOUNTING HOLE

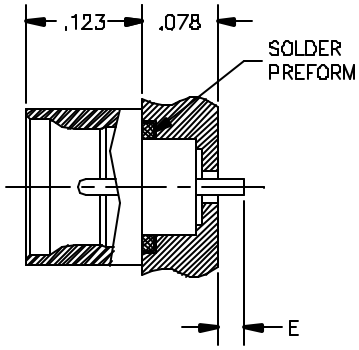

INSTALLATION VIEW

DRAWING NO. P682 REV. D

MATERIAL:

BODY & CENTER CONDUCTOR:
IRON-NIKEL-COBALT SEALING PER ASTM F-15
GLASS:
CORNING 7070

ELECTRICAL:

Impedance: 50 Ohms Nom.
Freq. Range: DC TO 18 GHz
VSWR: 1.10 + .005*f (GHz)
Insertion Loss: .035 × √f GHz
Working Voltage: 600 Vrms @ Sea Level
Dielectric Withstand Voltage: 500 V rms
RF HiPot Voltage: 325 Vrms Min @ 5MHz
Corona Level: 190 Vrms @ 70,000 ft
Insulation Resistance: 5000 Mohms
Contact Resistance: 4.0 Milliohms Max
RF Leakage: -80 dB max to 3.0 GHz
-65 dB max to 18.0 GHz

MECHANICAL:

Interface Dimensions:
MIL-STD-348
Connector Durability:
Full detent: 100 Cycles
Limited Detent: 500 Cycles
Smooth Bore: 1000 Cycles
Center Contact Retention:
10 lbs Min Axial
Force to Engage and Disengage:

	Engage	Disengage
Full detent:	10 lbs max	5 lbs min
Limited Detent:	8 lbs max	2 lbs min
Smooth Bore:	2 lbs max	.5 lbs min

ENVIRONMETAL:

Temp. Range: -65°C to +165°C
Thermal Shock:
MIL-STD-202, Method 107, Test Cond. B
Moisture Resistance:
MIL-STD-202, Method 106. Insulation resistance at least 200 MegaOhms within 5 minutes after removal from humidity
Corrosion:
MIL-STD-202, Method 101, Test Cond. B
Vibration:
MIL-STD-202, Method 204, Test Cond. D
Shock:

FINISH:

BODY & CENTER CONDUCTOR:
GOLD PLATE PER ASTM B-488 OVER NICKEL PLATE PER AMS-QQ-N-290

APPLICABLE TENSOLITE DOCUMENTS

WORK STD	PROD INST	ASSY INST
NA	NA	NA

NOTICE
THIS DRAWING INCLUDES A CONFIDENTIAL, PROPRIETARY DESIGN GENERATED BY TENSOLITE COMPANY AND ALL DESIGN, MANUFACTURING INFORMATION, USE AND SALE RIGHTS REGARDING THE SAME ARE EXPRESSLY RESERVED. IT IS SUBMITTED UNDER A CONFIDENTIAL RELATIONSHIP FOR A SPECIFICS PURPOSE AND THE RECIPIENT AGREES BY ACCEPTING THE DRAWING NOT TO COPY OR DISCLOSE ANY INFORMATION REGARDING IT TO ANY UNAUTHORIZED PERSON TO INCORPORATE IN OTHER PRODUCTS ANY SPECIAL FEATURES PECULIAR TO THIS DESIGN. ALL PATENT RIGHTS HERETO ARE EXPRESSLY RESERVED BY TENSOLITE COMPANY, LONG BEACH, CALIFORNIA 90815.

TOLERANCES AND NOTES
EXCEPT AS NOTED
DIMENSIONS ARE IN INCHES
LINEAR .XX ±.010 .XXX ±.005 ANGULAR ± 1/2°
FRACTION ± 1/32
1. MACHINE FINISH 63 RMS
2. BREAK ALL SHARP EDGES .003 MAX.
3. MACHINED FILLETS .005 MAX.
4. MACHINED SURFACES SQUARE TO RESPECTIVE AXIS WITHIN .005 INCHES PER INCH.
5. MACHINED DIAMETERS CONCENTRIC WITHIN .002 T.I.R.
6. DIMENSIONS TO BE NET BEFORE PLATING.
7. DRAW FOR ALL TAPERS 10°.
8. THREADS PER H-28.
9. REMOVE FRAYED EDGES ON TEFLON.
10. REMOVE ALL BURRS.

	MATERIAL	SIZE	DESCRIPTION	PROCUREMENT
NEXT ASSY				

APPROVAL	INITIALS	DATE
DRAWN BY	BRD	02/14/99
CHECKED		
QUALITY		
ENGINEERING	ATV	11/02/05

Tensolite
HIGH PERFORMANCE CABLES
& INTERCONNECT SYSTEMS
Long Beach, California 90815

TITLE
SMP MALE (HERMETIC SEAL)
TO STRAIGHT TERMINATION

SCALE 10/1 SUB-DIVISION/CHANGE _OLP\ SHEET 1 OF 1

SIZE C CODE 30990 DRAWING NO. P682 REV. D