P/N	APPLICABLE NOTES
-100	1,2,3

REVISIONS				
ZONE	REV	DESCRIPTION	DATE	BY
–	A	ECO 10626	09.08.99	DKN
–	B	ECO 11712	05/26/00	IMG

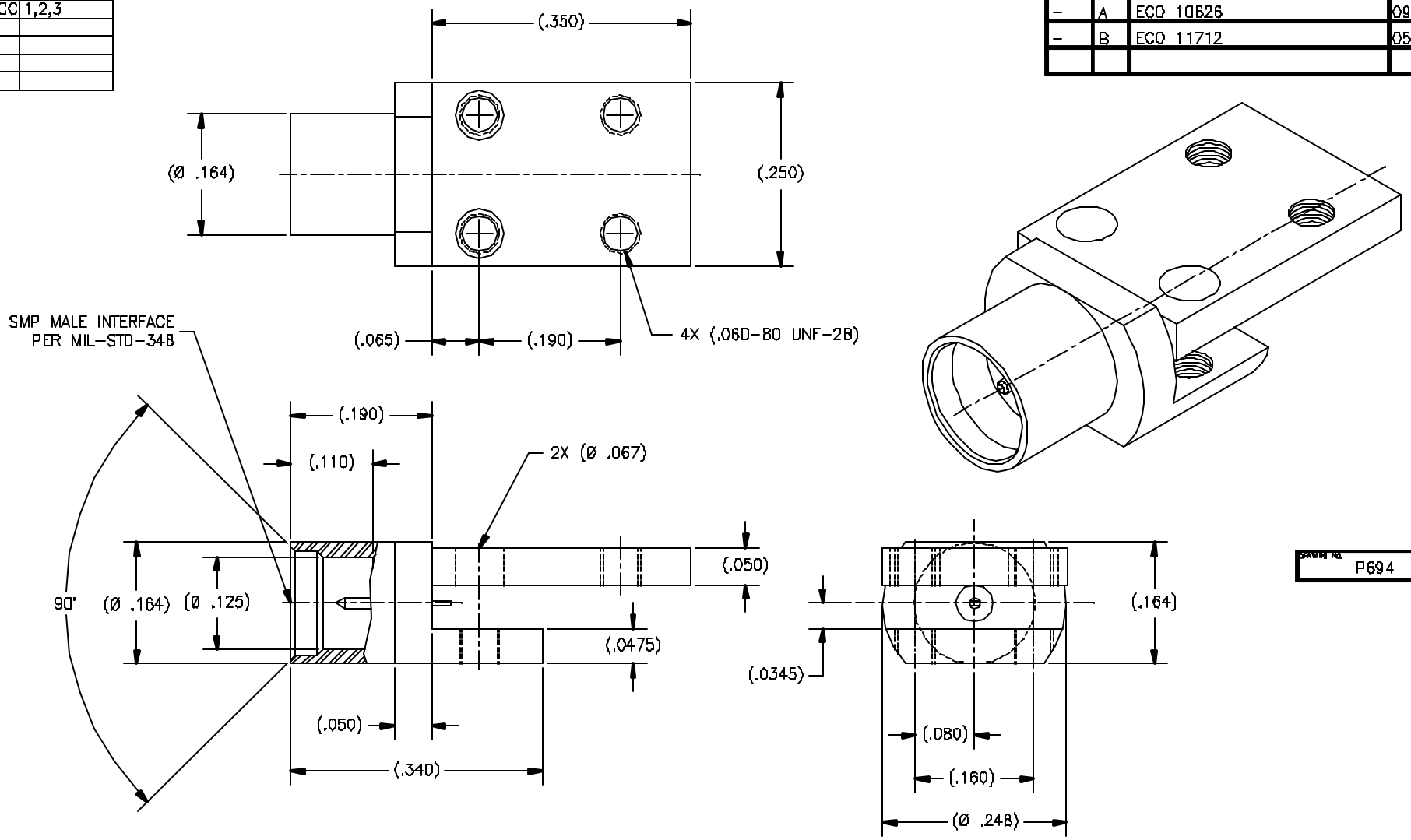

DRAWING NO.	REV.
P694	B

NOTE(S):

1. MATERIAL(S):
   1.1 BODY, PLATE AND CENTER CONDUCTOR: BeCu ALLOY PER ASTM B-196 OR 197
   1.2 INSULATOR: PTFE PER ASTM D-1710.
2. FINISH(ES):
   2.1 BODY, PLATE AND CENTER CONDUCTOR: GOLD PLATED PER ASTM B-488 OVER NICKEL PLATING PER QQ-N-290.
   2.2 INSULATOR: NONE
3. ELECTRICAL PERFORMANCE(S):
   3.1 FREQUENCY RANGE: DC-18GHz
   3.2 R.F. INSERTION LOSS: 0.1dB Max to 18GHz
   3.3 VSWR: 1.20:1 Max to 18GHz

APPLICABLE TENSOLITE DOCUMENTS

WORK STD	PROD INST	ASSY INST
NA	NA	NA

NOTICE
THIS DRAWING INCORPORATES A CONFIDENTIAL, PROPRIETARY DESIGN GENERATED BY TENSOLITE COMPANY AND ALL DESIGN, MANUFACTURING REPRODUCTION, USE AND SALE RIGHTS REGARDING THE SAME ARE EXPRESSLY RESERVED. IT IS SUBMITTED UNDER A CONFIDENTIAL RELATIONSHIP FOR A SPECIFICS PURPOSE AND THE RECIPIENT AGREES BY ACCEPTING THE DRAWING NOT TO COPY OR DISCLOSE ANY INFORMATION REGARDING IT TO ANY UNAUTHORIZED PERSON TO INCORPORATE IN OTHER PRODUCTS ANY SPECIAL FEATURES PECULIAR TO THIS DESIGN. ALL PATENT RIGHTS HERETO ARE EXPRESSLY RESERVED BY TENSOLITE COMPANY, LONG BEACH, CALIFORNIA 90815.

TOLERANCES AND NOTES
EXCEPT AS NOTED
DIMENSIONS ARE IN INCHES
LINEAR .XX ±.010 .XXX ±.005 ANGULAR ± 1/2°
FRACTION ± 1/32

1. MACHINE FINISH 63 RMS
2. BREAK ALL SHARP EDGES .003 MAX.
3. MACHINED FILLETS .005 MAX.
4. MACHINED SURFACES SQUARE TO RESPECTIVE AXIS WITHIN .005 INCHES PER INCH.
5. MACHINED DIAMETERS CONCENTRIC WITHIN .001 T.I.R.
6. DIMENSIONS TO BE MET BEFORE PLATING.
7. CHAM FOR ALL THREADS 45°.
8. THREADS PER H-28.
9. REMOVE FRAYED EDGES ON TEFLON.
10. REMOVE ALL BURRS.

–			–	–	–
MATERIAL			SIZE	SPECIFICATION	PROCUREMENT
NEXT ASSY			Tensolite	HIGH PERFORMANCE CABLES & INTERCONNECT SYSTEMS Long Beach, California 90815	
APPROVAL	INITIALS	DATE	TITLE	SMP MALE (SMOOTH BORE) STRIPLINE ENDLAUNCH	
DRAWN BY	ATV	07.16.98			
CHECKED					
QUALITY			SCALE 10/1	SUB-DRAWING/FORMAT OLPXXX\OLP694	SHEET 1 OF 1
ENGINEERING	ATV	05.21.00	SIZE C	CODE IDENT 30990	DRAWING NO. P694 REV. B