P/N	APPLICABLE NOTES	INTERFACE	(Ø A)	FIGURE
-1CCSF	1,2,3	FULL DETENT	.116	1
-2CCSF	1,2,3	LIMITED DETENT	.120	1
-3CCSF	1,2,3	SMOOTH BORE	.125	1
-4CCSF	1,2,3	CATCHER'SMITT	.125	2

REVISIONS				
ZONE	REV	DESCRIPTION	DATE	BY
–	A	ECO 11717	06/27/00	IMG
–	B	ECO 12295	10/03/00	IMG
–	C	ECO 12863	03/02/01	HDB

FIGURE 1

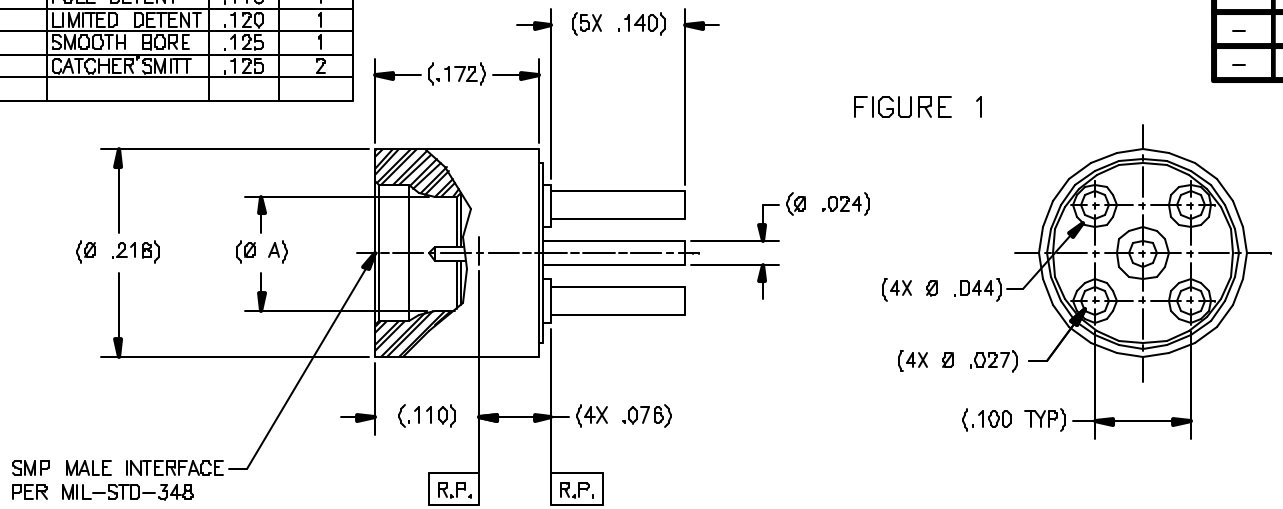

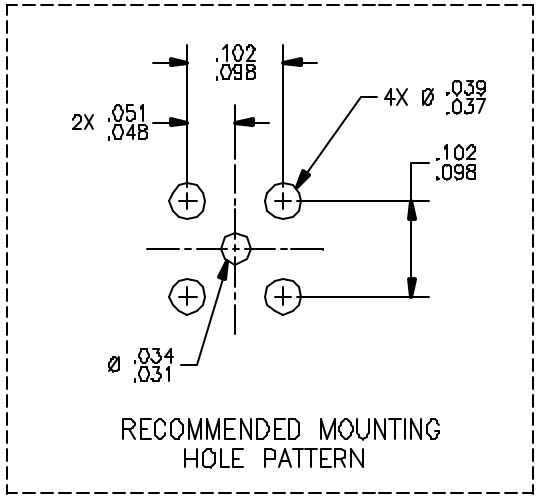

FIGURE 2

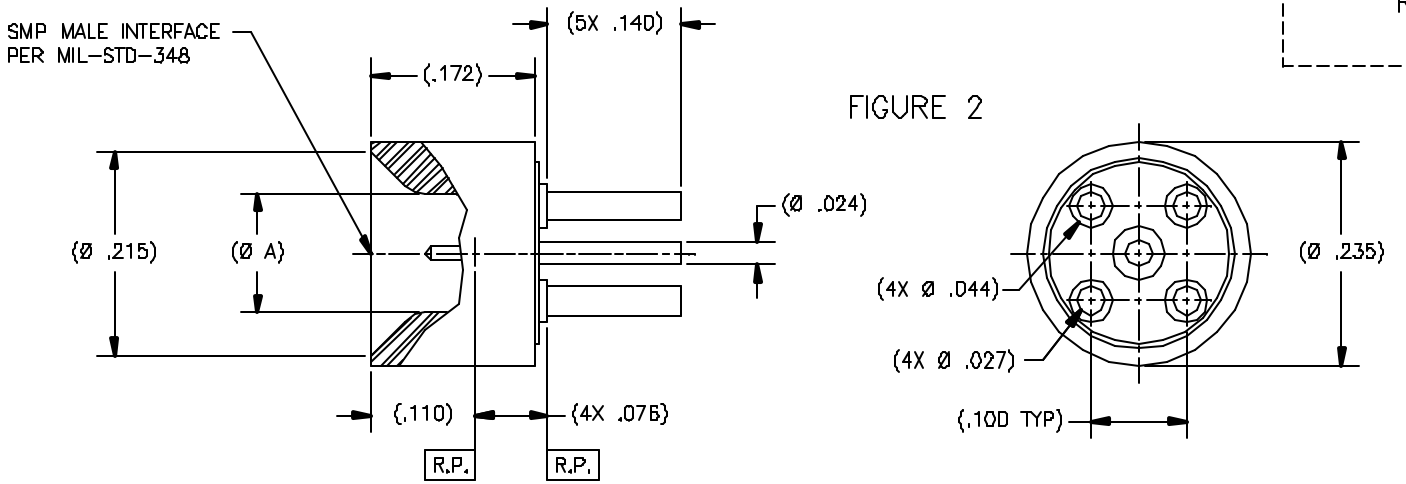

DRAWING NO.	REV.
P696	C

NOTE(S):

1. MATERIAL(S):
   1.1 BODY (SMP): 303 SST PER ASTM A-582
   1.2 CONTACT AND BODY (STAND): BeCu ALLOY PER ASTM B-196.
   1.3 INSULATOR: PTFE PER ASTM D-1710
2. FINISH(ES):
   2.1 BODY (SMP): PASSIVATE PER ASTM A-967
   2.2 CONTACT AND BODY (STAND): GOLD PLATE PER ASTM B-488 OVER NICKEL PLATE PER AMS-QQ-N-290
   2.3 INSULATOR: NONE
3. ELECTRICAL PERFORMANCE:
   3.1 FREQUENCY RANGE: DC-12GHz
   3.2 R.F. INSERTION LOSS: 0.1dB MAX TO 12GHz
   3.3 VSWR: 1.35:1 MAX TO 12GHz

NOTICE

THIS DRAWING INCLUDES A CONFIDENTIAL, PROPRIETARY DESIGN GENERATED BY TENSOLITE COMPANY AND ALL DESIGN, MANUFACTURING REPRODUCTION, USE AND SALE RIGHTS REGARDING THE SAME ARE EXPRESSLY RESERVED. IT IS SUBMITTED UNDER A CONFIDENTIAL RELATIONSHIP FOR A SPECIFIC PURPOSE AND THE RECIPIENT AGREES BY ACCEPTING THE DRAWING NOT TO SUPPLY OR DISCLOSE ANY INFORMATION REGARDING IT TO ANY UNAUTHORIZED PERSON TO INCORPORATE IN OTHER PRODUCTS ANY SPECIAL FEATURES PECULIAR TO THIS DESIGN. ALL PATENT RIGHTS HERETO ARE EXPRESSLY RESERVED BY TENSOLITE COMPANY, LONG BEACH, CALIFORNIA 90815.

TOLERANCES AND NOTES EXCEPT AS NOTED
DIMENSIONS ARE IN INCHES
LINEAR .XX ±.010 .XXX ±.005 ANGULAR ± 1/2°
FRACTION ± 1/32

1. MACHINE FINISH 63 RMS
2. BREAK ALL SHARP EDGES .003 MAX.
3. MACHINED FILLETS .005 MAX.
4. MACHINED SURFACES SQUARE TO RESPECTIVE AXIS WITHIN .005 INCHES PER INCH.
5. MACHINED DIAMETERS CONCENTRIC WITHIN .002 T.I.R.
6. DIMENSIONS TO BE MET BEFORE PLATING.
7. CHAM PER ALL THREADS 45°.
8. THREADS PER H-28.
9. REMOVE FRAYED EDGES ON TEFLON.
10. REMOVE ALL BURRS.

SEE NOTE(S)	–	SEE NOTE(S)	–
MATERIAL	SIZE	SPECIFICATION	PROCUREMENT

NEXT ASSY

APPROVAL	INITIALS	DATE
DRAWN BY	ATV	08.09.99
CHECKED		
QUALITY		
ENGINEERING	ATV	12.14.01

Tensolite
HIGH PERFORMANCE CABLES & INTERCONNECT SYSTEMS
Long Beach, California 90815

TITLE: SMP MALE DETENT STRAIGHT MOUNT TO PCB

SCALE: 10:1 | SUB-DIRECTORY/FILENAME: OLPXXX\OLP696 | SHEET 1 OF 1

SIZE: C | CAGE CODE: 30990 | DRAWING NO.: P696 | REV.: C