P/N	INTERFACE	FIGURE	(Ø A)
-1CC	FULL DETENT	1	.116
-2CC	LIMITED DETENT	1	.120
-3CC	SMOOTH BORE	1	.125
-4CC	CATCHER'S MITT	2	.125

REVISIONS

ZONE	REV	DESCRIPTION	DATE	BY
–	E	ECO 11737	05.30.00	DKN
–	F	ECO 13864	10.29.01	AGS
–	G	ECO 14199	04.02.02	AGS

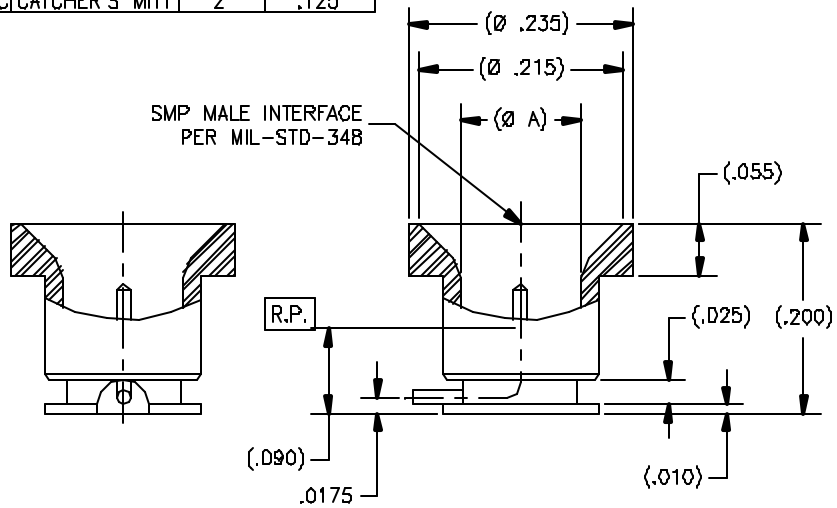

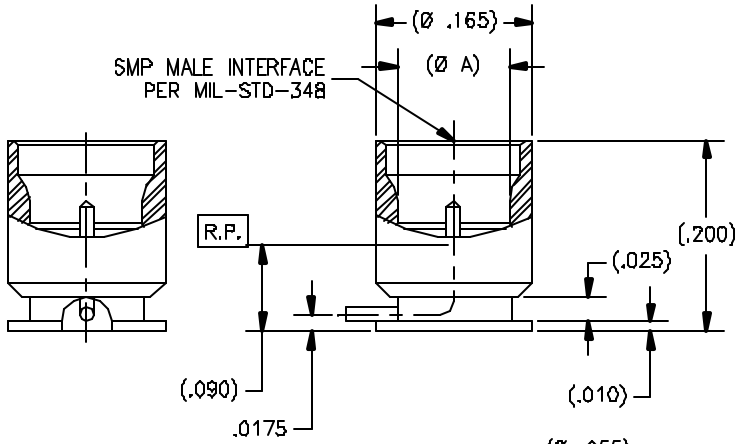

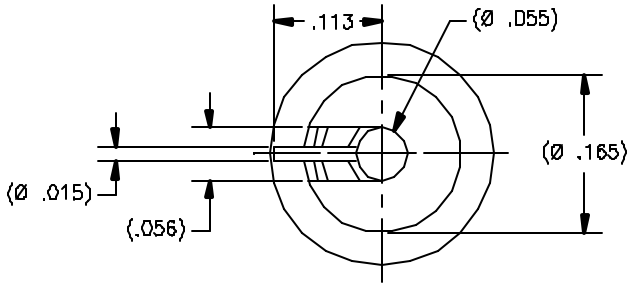

FIGURE 2

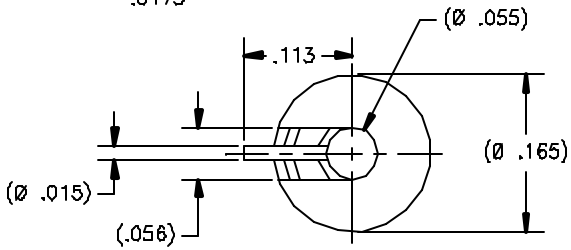

FIGURE 1

DRAWING NO.	REV.
P702	G

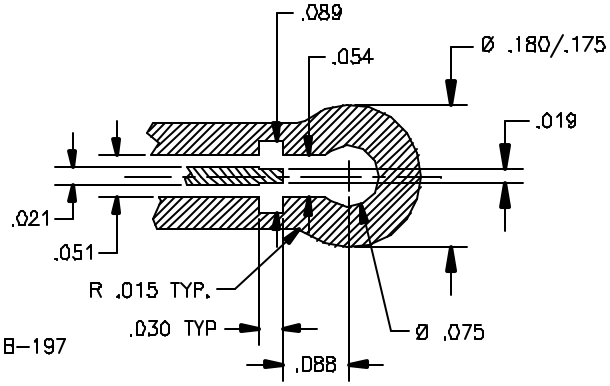

MOUNTING HOLE PATTERN

ROGERS 4350 PCB MATERIAL

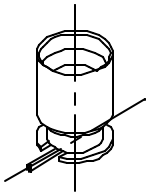

NOTE(S):

1. MATERIAL:
   1.1 BODY: 303 SST PER ASTM A-582
   1.2 INSERT & CONTACT: BeCu ALLOY PER ASTM B-196 OR B-197
   1.2 INSULATOR: PTFE PER ASTM D-1710
2. FINISH:
   2.1 BODY: PASSIVATE PER ASTM A-967
   2.2 INSERT & CONTACT: GOLD PLATE PER ASTM B-488 OVER NICKEL PLATE PER AMS-QQ-N-290
   2.3 INSULATOR: NONE
3. ELECTRICAL PERFORMANCE:
   3.1 FREQUENCY RANGE: DC-18 GHz
   3.2 R.F. INSERTION LOSS: 0.5dB MAX TO 18 GHz
   3.3 VSWR: 1.20:1 MAX TO 18 GHz

TOLERANCES AND NOTES EXCEPT AS NOTED

DIMENSIONS ARE IN INCHES.
LINEAR .XX ±.010, .XXX ±.005 ANGULAR ± 1/2°
FRACTION ± 1/32
MACHINE FINISH 63 RMS
BREAK ALL SHARP EDGES .003 MAX.

1. MACHINED FILLETS .005 MAX.
4. MACHINED SURFACES SQUARE TO RESPECTIVE AXIS WITHIN .005 INCHES PER INCH.
6. MACHINED DIAMETERS CONCENTRIC WITHIN .002 T.I.R.
6. DIMENSIONS TO BE MET BEFORE PLATING.
7. CHAM FER ALL THREADS 45°.
8. THREADS PER H-28.
9. REMOVE FRAYED EDGES ON TEFLON.
10. REMOVE ALL BURRS.

NOTICE

THIS DRAWING INCORPORATES A CONFIDENTIAL, PROPRIETARY DESIGN GENERATED BY TENSOLITE COMPANY AND ALL DESIGN, MANUFACTURING INFORMATION, USE AND SALE RIGHTS REGARDING THE SAME ARE EXPRESSLY RESERVED. IT IS SUBMITTED UNDER A CONFIDENTIAL RELATIONSHIP FOR A SPECIFIC PURPOSE AND THE RECIPIENT AGREES BY ACCEPTING THE DRAWING NOT TO COPY OR DISCLOSE ANY INFORMATION REGARDING IT TO ANY UNAUTHORIZED PERSON TO INCORPORATE IN OTHER PRODUCTS ANY SPECIAL FEATURES PECULIAR TO THIS DESIGN. ALL PATENT RIGHTS HEREIN ARE EXPRESSLY RESERVED BY TENSOLITE COMPANY, LONG BEACH, CALIFORNIA 90815.

SEE NOTE(S)	–	SEE NOTE(S)	–
MATERIAL	SIZE	SPECIFICATION	PROCUREMENT

NEXT ASSY

APPROVAL	INITIALS	DATE
DRAWN BY	ATV	03.16.98
CHECKED		
QUALITY		
ENGINEERING	ATV	04.03.02

Tensolite
HIGH PERFORMANCE CABLES & INTERCONNECT SYSTEMS
Long Beach, California 90815

TITLE: SMP MALE STRAIGHT SURFACE MOUNT

SCALE 10/1 | SUB-DIRECTORY/FILENAME OLPXX\OLP702 | SHEET 1 OF 1

SIZE C | CODE IDENT 30990 | DRAWING NO. P702 | REV. G