P/N	APPLICABLE NOTE(S)	INTERFACE(S)	(Ø A)
-1CC	1,2,3	FULL DETENT	.116
-2CC	1,2,3	LIMITED DETENT	.120
-3CC	1,2,3	SMOOTH BORE	.125

REVISIONS

ZONE	REV	DESCRIPTION	DATE	BY
-	A	ECO 11756	05/27/00	IMG
-	B	ECO 18841	11/11/05	RC

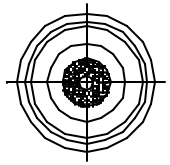

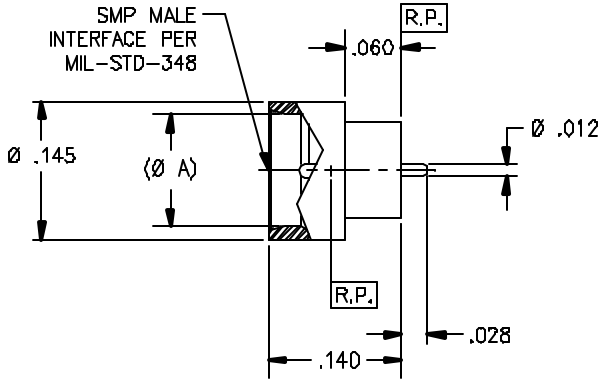

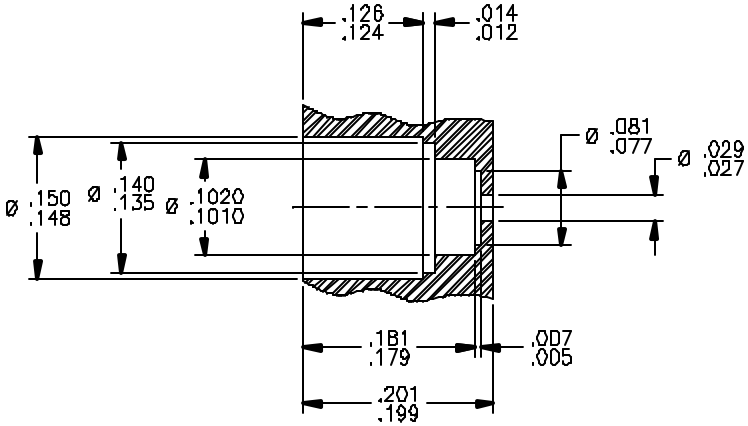

RECOMMENDED MOUNTING HOLE

DRAWING NO. P790 REV. B

MATERIAL:	ELECTRICAL:	MECHANICAL:	ENVIRONMETAL:
BODY & CENTER CONDUCTOR KOVAR PER ASTM F-15 GLASS SEAL: CORNING 7070 GLASS	Impedance: 50 Ohms Nom. Freq. Range: DC TO 18 GHz VSWR: 1.10 + .005*f (GHz) Insertion Loss: .035 x √f GHz Working Voltage: 600 Vrms @ Sea Level Dielectric Withstand Voltage: 500 V rms RF HiPot Voltage: 325 Vrms Min @ 5MHz Corona Level: 190 Vrms @ 70,000 ft Insulation Resistance: 5000 Mohms RF Leakage: -(65 - f GHz) dB Contact Resistance: Center Conductor: 4.0 Milliohms	Interface Dimensions: MIL-STD-348 Connector Durability: 500 Cycles Center Contact Retention: 10 lbs Min Axial N/A Radial Force to Engage and Disengage: 8.0 lbs Engage 2.0 lbs Disengage	Temp. Range: -65°C to +165°C Thermal Shock: MIL-STD-202, Method 107, Test Cond. B Moisture Resistance: MIL-STD-202, Method 106. Insulation resistance at least 200 MegaOhms within 5 minutes after removal from humidity Corrosion: MIL-STD-202, Method 101, Test Cond. B Vibration: MIL-STD-202, Method 204, Test Cond. D Shock:

FINISH:

BODY & CENTER CONDUCTOR:
GOLD PLATE PER ASTM B-488 OVER NICKEL PLATE PER AMS-QQ-N-290

APPLICABLE TENSOLITE DOCUMENTS

WORK STD	PROD INST	ASSY INST
NA	NA	NA

NOTICE
THIS DRAWING INCLUDES A CONFIDENTIAL, PROPRIETARY DESIGN GENERATED BY TENSOLITE COMPANY AND ALL DESIGN, MANUFACTURING INFORMATION, USE AND SALE RIGHTS REGARDING THE SAME ARE EXPRESSLY RESERVED. IT IS SUBMITTED UNDER A CONFIDENTIAL RELATIONSHIP FOR A SPECIFICS PURPOSE AND THE RECIPIENT AGREES BY ACCEPTING THE DRAWING NOT TO SUPPLY OR DISCLOSE ANY INFORMATION REGARDING IT TO ANY UNAUTHORIZED PERSON TO INCORPORATE IN OTHER PRODUCTS ANY SPECIAL FEATURES PECULIAR TO THIS DESIGN. ALL PATENT RIGHTS HERETO ARE EXPRESSLY RESERVED BY TENSOLITE COMPANY, LONG BEACH, CALIFORNIA 90815.

TOLERANCES AND NOTES
EXCEPT AS NOTED
DIMENSIONS ARE IN INCHES
LINEAR .XX ±.010 .XXX ±.005 ANGULAR ± 1/2°
FRACTION ± 1/32
1. MACHINE FINISH 63 RMS
2. BREAK ALL SHARP EDGES .003 MAX.
3. MACHINED FILLETS .005 MAX.
4. MACHINED SURFACES SQUARE TO RESPECTIVE AXIS WITHIN .005 INCHES PER INCH.
5. MACHINED DIAMETERS CONCENTRIC WITHIN .001 T.I.R.
6. DIMENSIONS TO BE MET BEFORE PLATING.
7. CHAM PER ALL THREADS 45°.
8. THREADS PER H-28.
9. REMOVE FRAYED EDGES ON TEFLON.
10. REMOVE ALL BURRS.

MATERIAL	SIZE	SPECIFICATION	PROCUREMENT
-	-	-	-

NEXT ASSY

APPROVAL INITIALS		DATE
DRAWN BY	DKN	06.10.99
CHECKED		
QUALITY		
ENGINEERING	DNg	11.17.05

Tensolite
HIGH PERFORMANCE CABLES & INTERCONNECT SYSTEMS
Long Beach, California 90815

TITLE SMP MALE HERMETIC SEAL TO STRAIGHT TERMINATION

SCALE 10/1 SUB-DIRECTORY/FILENAME OLPXX\OLP790 SHEET 1 OF 1

SIZE C CAGE CODE 30990 DRAWING NO. P790 REV. B