P/N	APPLICABLE NOTES	(L)
-1CC	1,2,3	(.090)
-2CC	1,2,3	(.070)
-3CC	1,2,3	(.050)

REVISIONS				
ZONE	REV	DESCRIPTION	DATE	BY
–	D	ECO 11227	02.04.00	E.A.
–	E	ECO 11317	03.02.00	DKN
–	F	ECO 11523	04.20.00	DKN

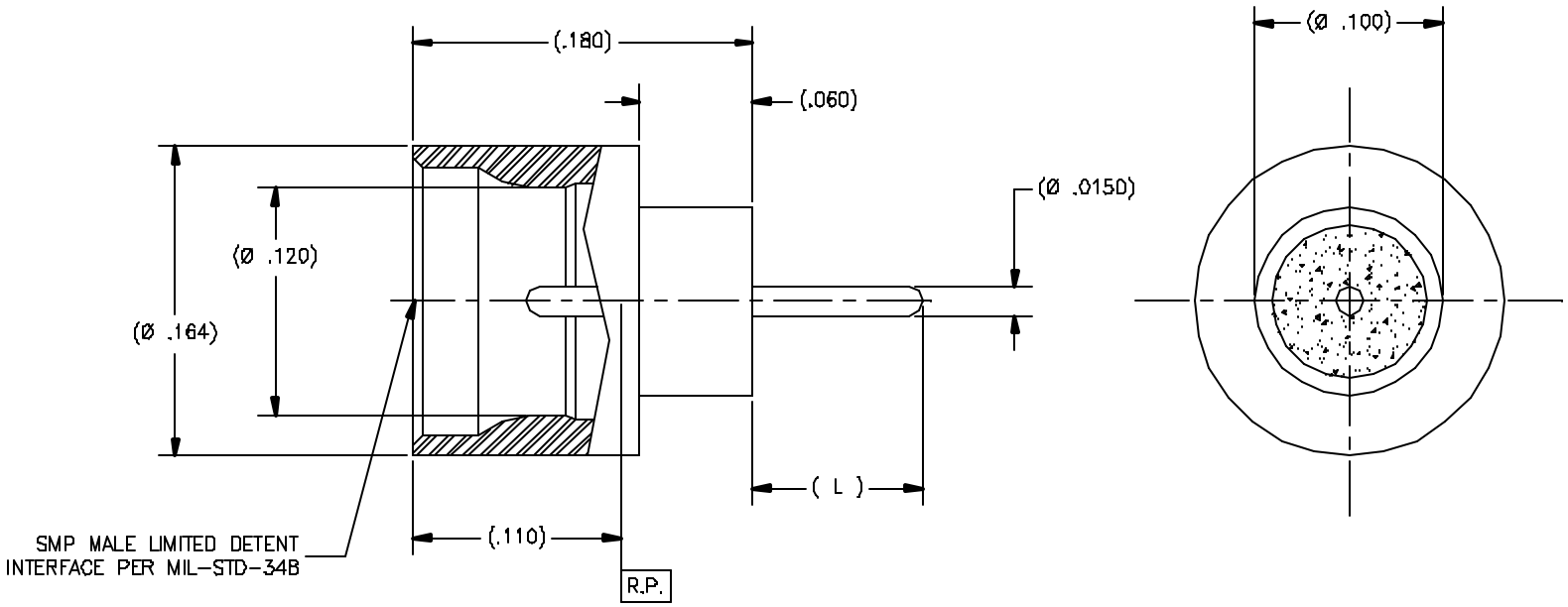

DRAWING NO.	REV.
P794	F

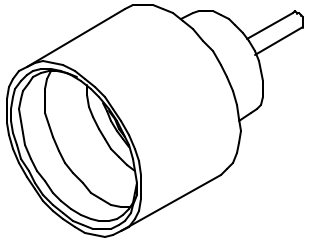

NOTE(S):

1. MATERIAL(S):
   1.1 BODY & CONTACT: IRON-NICKEL-COBALT SEALING ALLOY PER ASTM F-15
   1.2 GLASS SEAL: CORNING 7070
2. FINISH(S):
   2.1 BODY & CONTACT: GOLD PLATE PER ASTM B-488, OVER NICKEL PLATE PER QQ-N-290.
   2.2 GLASS SEAL: NONE
3. ELECTRICAL PERFORMANCE:
   3.1 FREQUENCY RANGE: DC-18 GHz
   3.2 R.F. INSERTION LOSS: 0.1 dB MAX TO 18GHz
   3.3 VSWR: 1.15:1 MAX TO 18GHz

NOTICE

THIS DRAWING EMBODIES A CONFIDENTIAL, PROPRIETARY DESIGN DERIVATED BY TENSOLITE COMPANY AND ALL DESIGN, MANUFACTURING INFORMATION, USE AND SALE RIGHTS REGARDING THE SAME ARE EXPRESSLY RESERVED. IT IS SUBMITTED UNDER A CONFIDENTIAL RELATIONSHIP FOR A SPECIFIED PURPOSE AND THE RECIPIENT AGREES BY ACCEPTING THIS DRAWING FOR TO SUPPLY OR DISCLOSE ANY INFORMATION REGARDING IT TO ANY UNAUTHORIZED PERSON OR TO INCORPORATE IN OTHER PROJECTS ANY SPECIAL FEATURES POPULAR TO THIS DESIGN. ALL PATENT RIGHTS HEREIN ARE EXPRESSLY RESERVED BY TENSOLITE COMPANY, LONG BEACH, CALIFORNIA 90815

TOLERANCES AND NOTES EXCEPT AS NOTED

DIMENSIONS ARE IN INCHES
LINEAR .XX ±.010 .XXX ±.005 ANGULAR ± 1/2°
FRACTION ± 1/32

1. MACHINE FINISH 63 RMS
2. BREAK ALL SHARP EDGES .003 MAX.
3. MACHINED FILLETS .005 MAX.
4. MACHINED SURFACES SQUARE TO PERPENDICULAR AXIS WITHIN .005 INCHES PER INCH.
5. MACHINED DIAMETERS CONCENTRIC WITHIN .001 T.I.R.
6. DIMENSIONS TO BE MET BEFORE PLATING.
7. CHAMFER ALL THREADS 45°.
8. THREADS PER H-28.
9. REMOVE FRAYED EDGES ON TEFLON.
10. REMOVE ALL BURRS.

SEE NOTE(S)	–	SEE NOTE(S)	–
MATERIAL	SIZE	SPECIFICATION	PROCUREMENT

NEXT ASSY

APPROVAL INITIALS		DATE
DRAWN BY	DKN	08.10.99
ENGINEERING	NP	04.20.00

Tensolite RF/Microwave Connectors
Long Beach, California 90815

TITLE: SMP MALE LIMITED DETENT STRAIGHT SOLDER IN HERMETIC

SCALE: 20/1 | SUB-DIRECTORY/FILENAME: 0LPXX\0LP794 | SHEET 1 OF 2

SIZE: C | CAGE CODE: 30990 | DRAWING NO.: P794 | REV.: F