P/N	APPLICABLE NOTES
-100	1,2,3

REVISIONS

ZONE	REV	DESCRIPTION	DATE	BY
–	A	ECO 11670	06/08/00	IMG

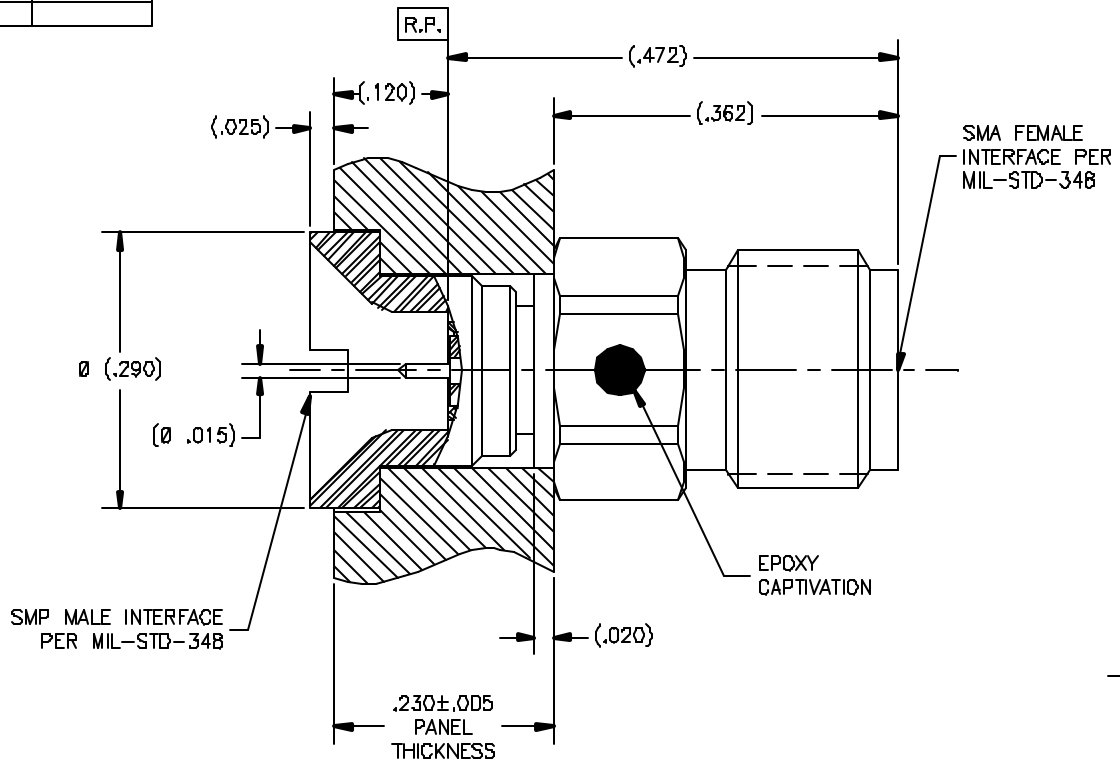

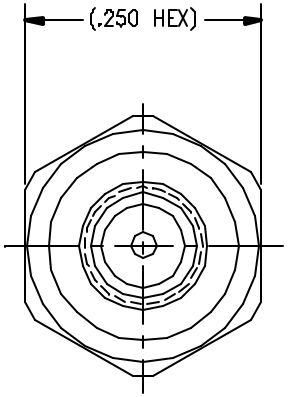

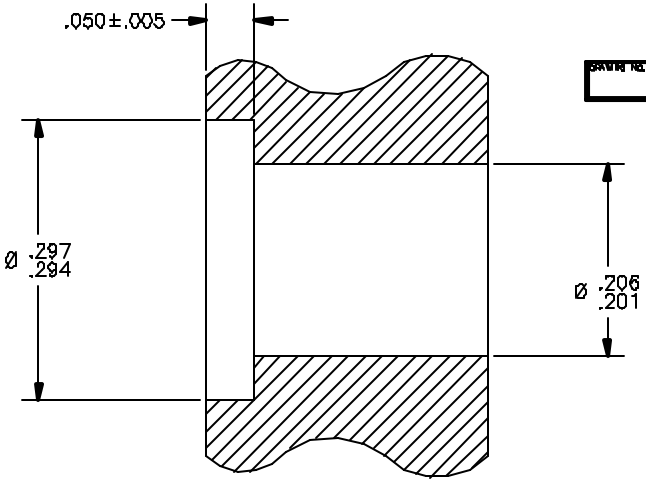

MOUNTING HOLE DIM.

DRAWING NO. P802 REV. A

NOTE(S):

1. MATERIAL(S):
   1.1 BODY & SHROUD: 303 SST PER ASTM A-582.
   1.2 CONTACT: BeCu ALLOY PER ASTM B-196 OR B-197.
   1.3 INSULATOR: PTFE PER ASTM D-1710.
2. FINISH(ES):
   2.1 BODY & CONTACT: GOLD PLATE PER ASTM B-488 OVER NICKEL PLATE PER QQ-N-290.
   2.2 SHROUD: PASSIVATE PER ASTM A-967
   2.2 INSULATOR: NONE
3. ELECTRICAL PERFORMANCE:
   3.1 FREQUENCY RANGE: DC-18GHz
   3.2 VSWR: 1.15 : 1 Max to 18GHz
   3.3 R.F. INSERTION LOSS: 0.2 dB Max to 18GHz

NOTICE

THIS DRAWING EMBODIES A CONFIDENTIAL, PROPRIETARY DESIGN ORIGINATED BY TENSOLITE COMPANY AND ALL DESIGN, MANUFACTURING REPRODUCTION, USE AND SALE RIGHTS REGARDING THE SAME ARE EXPRESSLY RESERVED. IT IS SUBMITTED UNDER A CONFIDENTIAL RELATIONSHIP FOR A SPECIFIED PURPOSE AND THE RECIPIENT AGREES BY ACCEPTING THIS DRAWING FOR TO SUPPLY OR DISCLOSE ANY INFORMATION REGARDING IT TO ANY UNAUTHORIZED PERSON OR TO INCORPORATE IN OTHER PROJECTS ANY SPECIAL FEATURES POPULAR TO THIS DESIGN. ALL PATENT RIGHTS HEREIN ARE EXPRESSLY RESERVED BY TENSOLITE COMPANY, LONG BEACH, CALIFORNIA 90815

TOLERANCES AND NOTES EXCEPT AS NOTED

DIMENSIONS ARE IN INCHES.
LINEAR .XX ±.010 .XXX ±.005 ANGULAR ± 1/2°
FRACTION ± 1/32

1. MACHINE FINISH 63 RMS
2. BREAK ALL SHARP EDGES .003 MAX.
3. MACHINED FILLETS .005 MAX.
4. MACHINED SURFACES SQUARE TO RESPECTIVE AXIS WITHIN .005 INCHES PER INCH.
5. MACHINED DIAMETERS CONCENTRIC WITHIN .001 T.I.R.
6. DIMENSIONS TO BE MET BEFORE PLATING.
7. CHAMFER ALL THREADS 45°.
8. THREADS PER H-28.
9. REMOVE FRAYED EDGES ON TEFLON.
10. REMOVE ALL BURRS.

–	–	–	–
MATERIAL	SIZE	SPECIFICATION	PROCUREMENT

NEXT ASSY

APPROVAL INITIALS		DATE
DRAWN BY	DKN	08.09.99
CHECKED		
QUALITY		
ENGINEERING	ATV	07.10.00

Tensolite RF/Microwave Connectors Long Beach, California 90815

TITLE SMP MALE (CATCHER'S MITT) TO SMA FEMALE ADAPTER

SCALE 10/1 SUB-DRAWING/FILENAME 0LPXX\0LP802 SHEET 1 OF 1

SIZE C CODE IDENT 30990 DRAWING NO. P802 REV. A