P/N	INTERFACE	Ø A
-1CCSF	FULL DETENT	(.116)
-2CCSF	LIMITED DETENT	(.120)
-3CCSF	SMOOTH BORE	(.125)

REVISIONS				
ZONE	REV	DESCRIPTION	DATE	BY
–	A	ECO 12728	03/02/01	HDB
–	B	ECO 15266	02.03.03	AGK

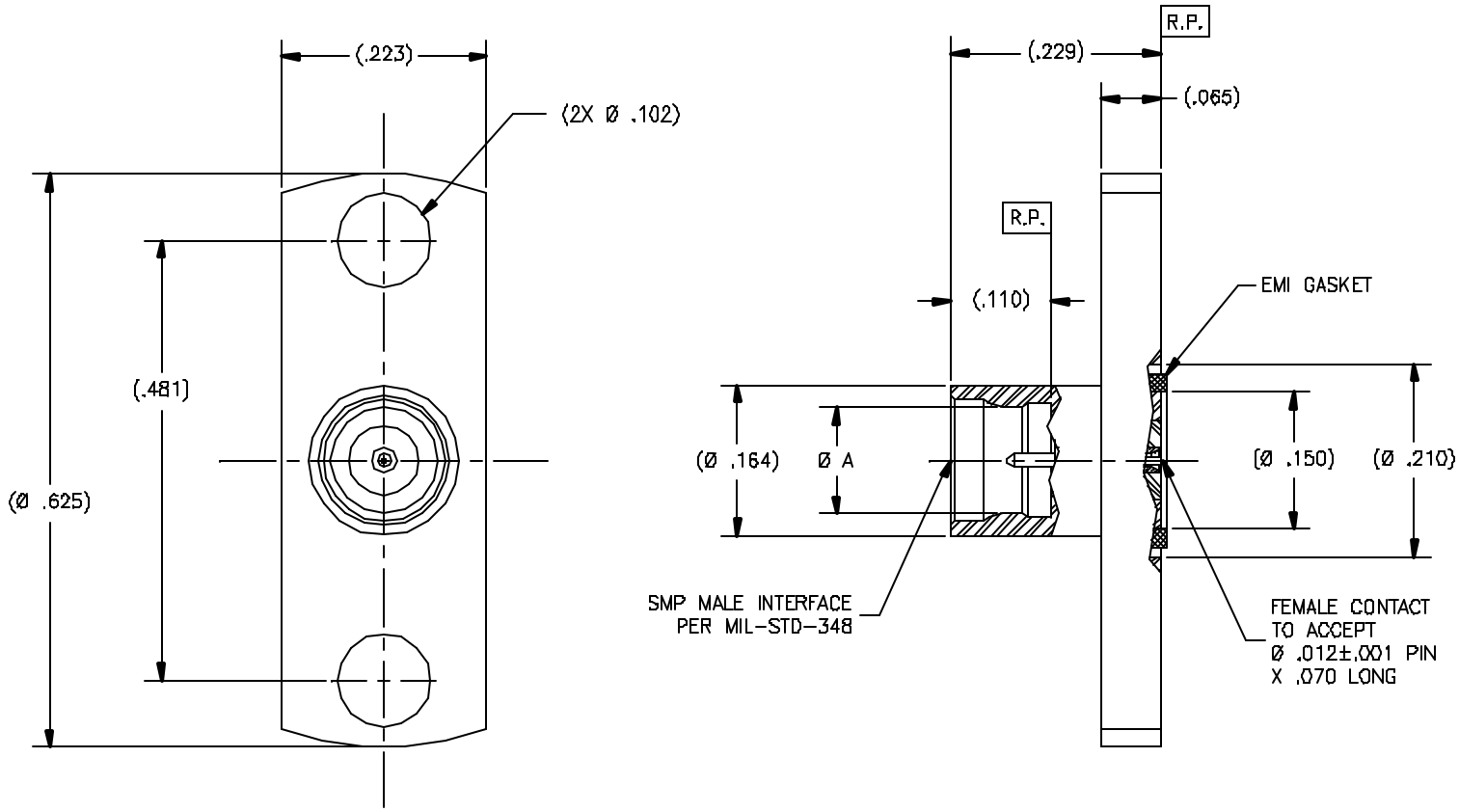

DRAWING NO.	REV.
P837	B

NOTE(S):

1. MATERIAL(S):
   - 1.1 BODY: 303 SST PER ASTM A-582
   - 1.2 CONTACT: BeCu ALLOY PER ASTM B-196 (or B-197)
   - 1.3 INSULATOR: PTFE PER ASTM D-1710
   - 1.4 GASKET: SILICONE PER MIL-G-83528
2. FINISH(ES):
   - 2.1 BODY: PASSIVATE PER ASTM A-967
   - 2.2 CONTACT: GOLD PLATE PER ASTM B-488 OVER NICKEL PLATE PER AMS-QQ-N-290
   - 2.3 INSULATOR AND GASKET: NONE
3. ELECTRICAL PERFORMANCE:
   - 3.1 FREQUENCY RANGE: DC-18 GHz
   - 3.2 R.F. INSERTION LOSS: 0.1 dB MAX TO 18 GHz
   - 3.3 VSWR: 1.15:1 MAX TO 18 GHz

NOTICE

THIS DRAWING EMBODIES A CONFIDENTIAL, PROPRIETARY DESIGN ORIGINATED BY TENSOLITE COMPANY AND ALL DESIGN, MANUFACTURING REPRODUCTION, USE AND SALE RIGHTS REGARDING THE SAME ARE EXPRESSLY RESERVED. IT IS SUBMITTED UNDER A CONFIDENTIAL RELATIONSHIP FOR A SPECIFIED PURPOSE AND THE RECIPIENT AGREES BY ACCEPTING THIS DRAWING NOT TO SUPPLY OR DISCLOSE ANY INFORMATION REGARDING IT TO ANY UNAUTHORIZED PERSON OR TO INCORPORATE IN OTHER PROJECTS ANY SPECIAL FEATURES POPULAR TO THIS DESIGN. ALL PATENT RIGHTS HEREIN ARE EXPRESSLY RESERVED BY TENSOLITE COMPANY, LONG BEACH, CALIFORNIA 90810

TOLERANCES AND NOTES
EXCEPT AS NOTED
DIMENSIONS ARE IN INCHES
LINEAR .XX ±.010 .XXX ±.005 ANGULAR ± 1/2°
FRACTION ± 1/32

1. MACHINE FINISH: 63 RMS
2. BREAK ALL SHARP EDGES .003 MAX.
3. MACHINED FILLETS .005 MAX.
4. MACHINED SURFACES SQUARE TO RESPECTIVE AXIS WITHIN .005 INCHES PER INCH.
5. MACHINED DIAMETERS CONCENTRIC WITHIN .002 T.I.R.
6. DIMENSIONS TO BE MET BEFORE PLATING.
7. CHAM FER ALL THREADS 45°.
8. THREADS PER H-28.
9. REMOVE FRAYED EDGES ON TEFLON.
10. REMOVE ALL BURRS.

SEE NOTES	–	SEE NOTES	–
MATERIAL	SIZE	FINISH	PROCUREMENT

NEXT ASSY

APPROVAL INITIALS		DATE
DRAWN BY	DKN	04.17.00
CHECKED		
QUALITY		
ENGINEERING	T.H.	02.03.03

Tensolite
HIGH PERFORMANCE CABLES & INTERCONNECT SYSTEMS
Long Beach, California 90815

TITLE SMP MALE DETENT W/ SMA FEMALE 2 HOLE FLANGE MOUNT W/ EMI GASKET

SCALE 10/1 | SUB-DIRECTORY/FILENAME _CLPXX\CLP837 | SHEET 1 OF 1

SIZE C | CODE IDENT 30990 | DRAWING NO. P837 | REV. B