P/N	APPLICABLE NOTE(S)	L	DETAIL
-1CC	1,2,3	.030	A
-2CC	1,2,3	.030	B
-3CC	1,2,3	.040	A
-4CC	1,2,3	.040	B
-5CC	1,2,3	.050	A
-6CC	1,2,3	.050	B
-7CC	1,2,3	.060	A
-8CC	1,2,3	.060	B
-9CC	1,2,3	.070	A
-10CC	1,2,3	.070	B
-11CC	1,2,3	.080	A
-12CC	1,2,3	.080	B
-13CC	1,2,3	.090	A
-14CC	1,2,3	.090	B
-15CC	1,2,3	.100	A
-16CC	1,2,3	.100	B
-17CC	1,2,3	.110	A
-18CC	1,2,3	.110	B
-19CC	1,2,3	.120	A
-20CC	1,2,3	.120	B
-21CC	1,2,3	.130	A
-22CC	1,2,3	.130	B
-23CC	1,2,3	.085	A
-24CC	1,2,3	.085	B

REVISIONS

ZONE	REV	DESCRIPTION	DATE	BY
–	B	ECO 12270	09/28/00	IMG
–	C	ECO 14726	08.01.02	AGS
–	D	ECO 16896	04.26.04	JF

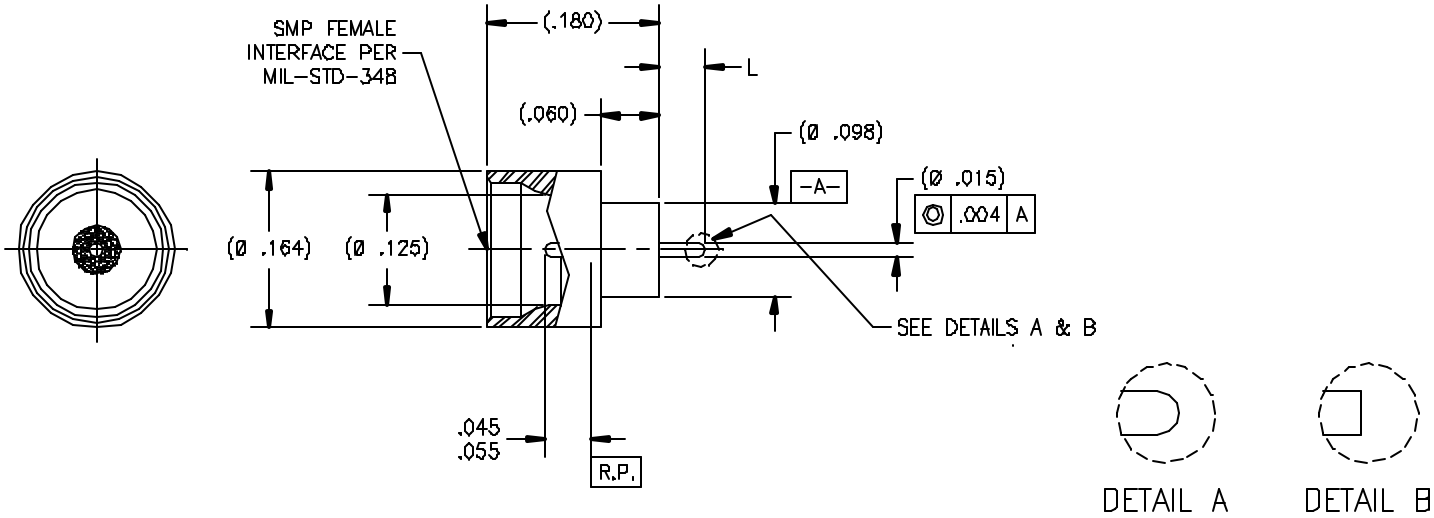

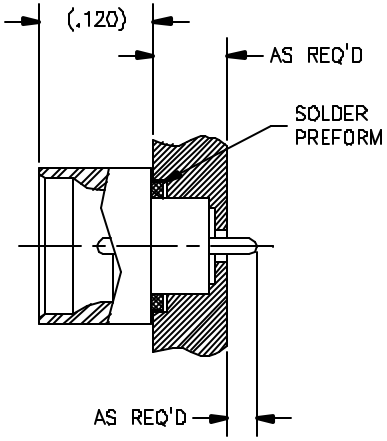

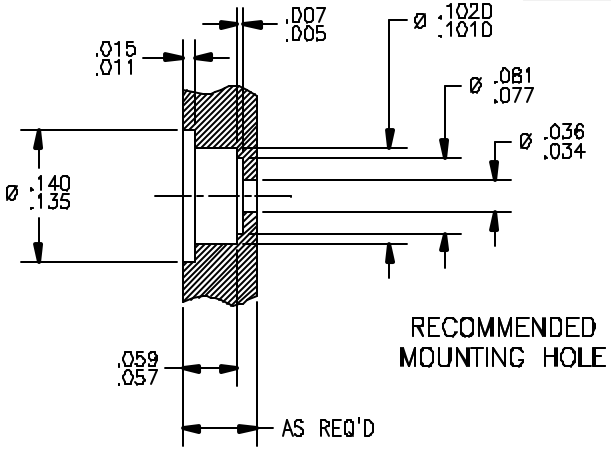

DRAWING NO. P840 REV. D

NOTE(S):

1. MATERIAL(S):
   1.1 BODY & CONTACT: IRON-NICKEL-COBALT SEALING ALLOY PER ASTM F-15
   1.2 GLASS SEAL: CORNING 7070
2. FINISH(S):
   2.1 BODY & CONTACT: GOLD PLATE PER ASTM B-488, OVER NICKEL PLATE PER QQ-N-290.
   2.2 GLASS SEAL: NONE
3. ELECTRICAL PERFORMANCE:
   3.1 FREQUENCY RANGE: DC-18 GHz
   3.2 R.F. INSERTION LOSS: 0.1 dB MAX TO 18GHz
   3.3 VSWR: 1.15:1 MAX TO 18GHz

APPLICABLE TENSOLITE DOCUMENTS

WORK STD	PROD INST	ASSY INST
NA	NA	NA

NOTICE
THIS DRAWING INCLUDES A CONFIDENTIAL, PROPRIETARY DESIGN GENERATED BY TENSOLITE COMPANY AND ALL DESIGN, MANUFACTURING INFORMATION, USE AND SALE RIGHTS REGARDING THE SAME ARE EXPRESSLY RESERVED. IT IS SUBMITTED UNDER A CONFIDENTIAL RELATIONSHIP FOR A SPECIFIC PURPOSE AND THE RECIPIENT AGREES BY ACCEPTING THE DRAWING NOT TO SUPPLY OR DISCLOSE ANY INFORMATION REGARDING IT TO ANY UNAUTHORIZED PERSON TO INCORPORATE IN OTHER PRODUCTS ANY SPECIAL FEATURES PECULIAR TO THIS DESIGN. ALL PATENT RIGHTS HEREIN ARE EXPRESSLY RESERVED BY TENSOLITE COMPANY, LONG BEACH, CALIFORNIA 90815.

TOLERANCES AND NOTES EXCEPT AS NOTED
DIMENSIONS ARE IN INCHES
LINEAR .XX ±.010 .XXX ±.005 ANGULAR ± 1/2°
FRACTION ± 1/64
1. MACHINE FINISH 63 RMS
2. BREAK ALL SHARP EDGES .003 MAX.
3. MACHINED FILLETS .005 MAX.
4. MACHINED SURFACES SQUARE TO RESPECTIVE AXIS WITHIN .005 INCHES PER INCH.
5. MACHINED DIAMETERS CONCENTRIC WITHIN .001 T.I.R.
6. DIMENSIONS TO BE MET BEFORE PLATING.
7. CHAM FER ALL THREADS 45°.
8. THREADS PER H-28.
9. REMOVE FRAYED EDGES ON TEFLON.
10. REMOVE ALL BURRS.

MATERIAL	SIZE	FINISH	PROCUREMENT
–	–	–	–

NEXT ASSY

APPROVAL	INITIALS	DATE
DRAWN BY	ATV	08.27.00
CHECKED		
QUALITY		
ENGINEERING	DNG	04.26.04

Tensolite
HIGH PERFORMANCE CABLES & INTERCONNECT SYSTEMS
Long Beach, California 90815

TITLE SMP MALE SMOOTH BORE, HERMETIC SEAL TO STRAIGHT TERMINATION

SCALE 10/1 SUB-DIRECTORY/FILENAME OLPXXX\OLP840 SHEET 1 OF 1

SIZE C CAGE CODE 30990 DRAWING NO. P840 REV. D